UISP airFiber 60 XR

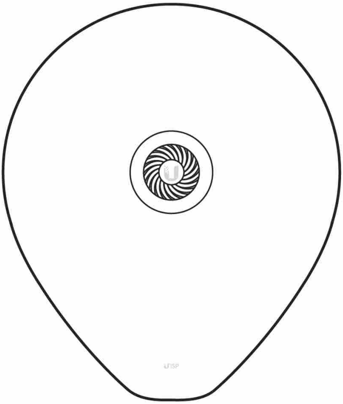

a

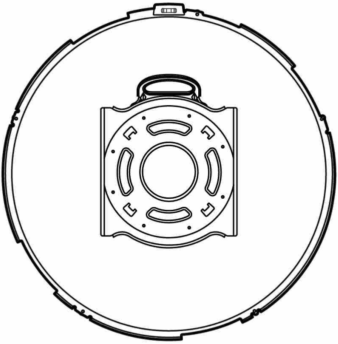

b

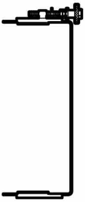

c

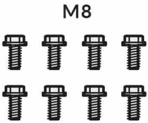

d

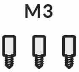

e

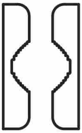

f

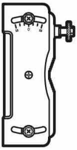

g

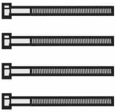

h

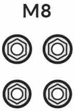

i

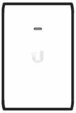

j

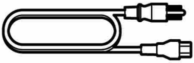

k

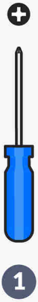

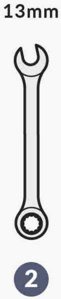

1

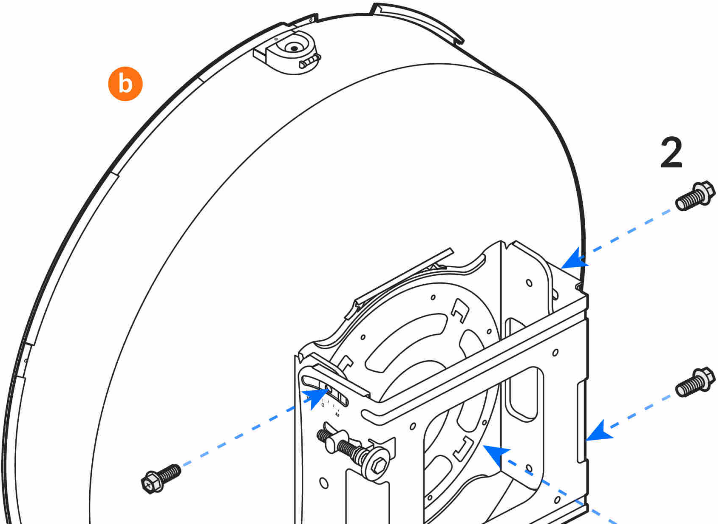

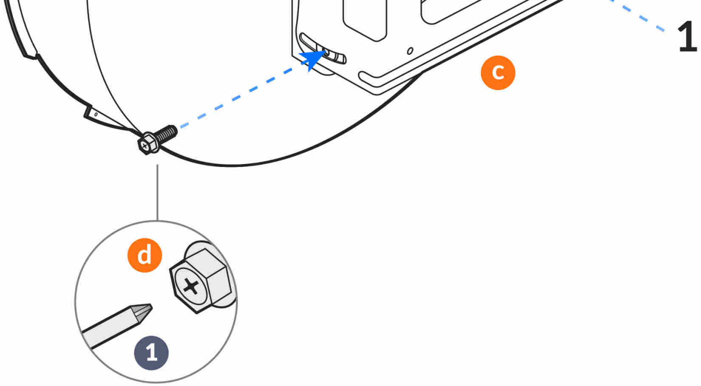

2

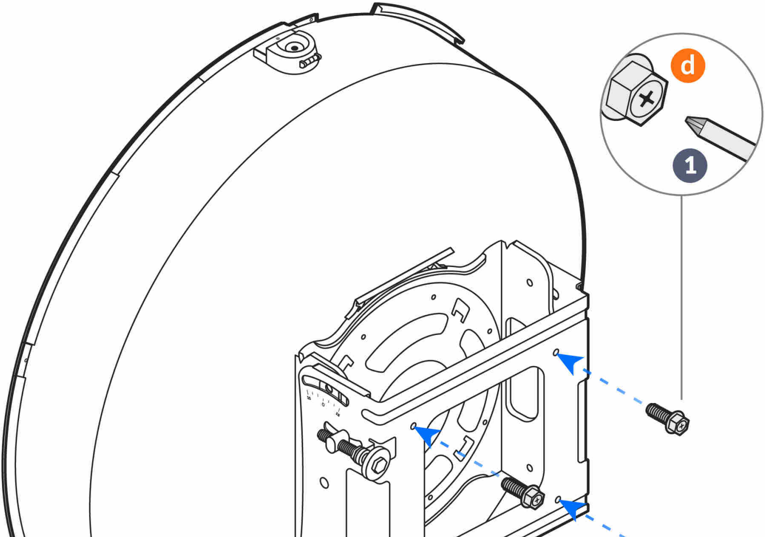

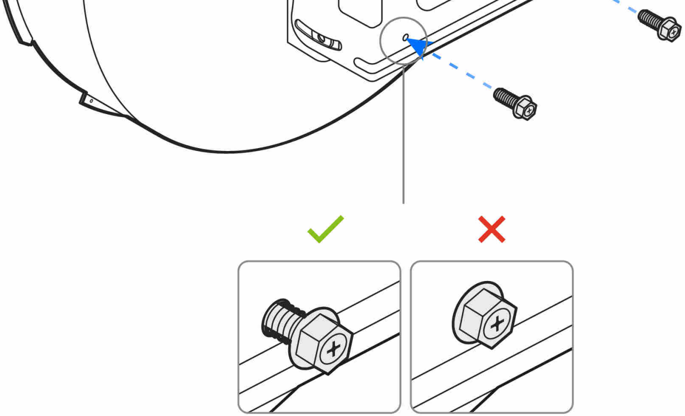

3

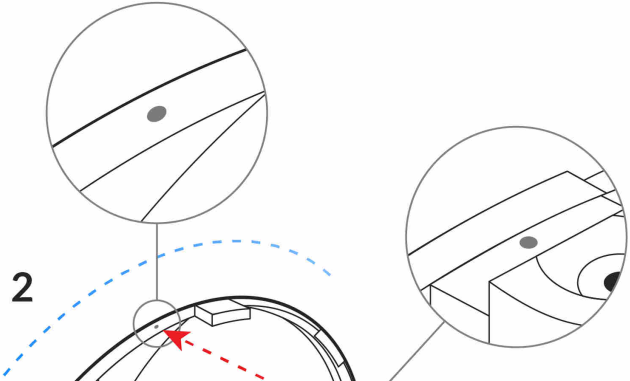

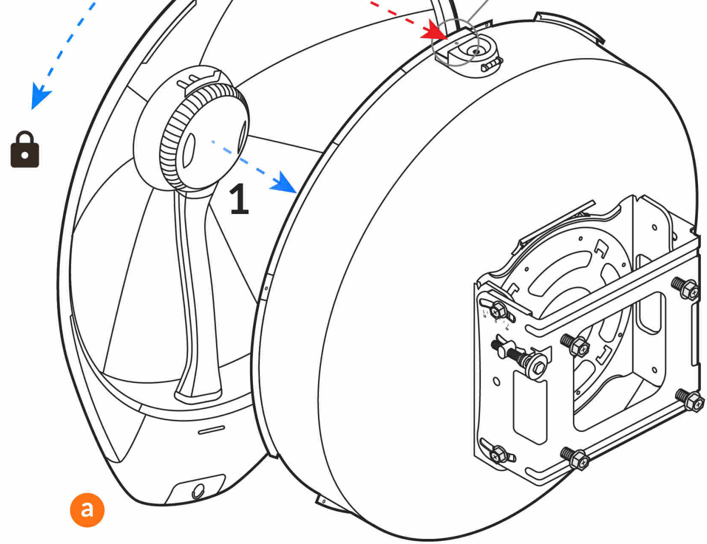

4

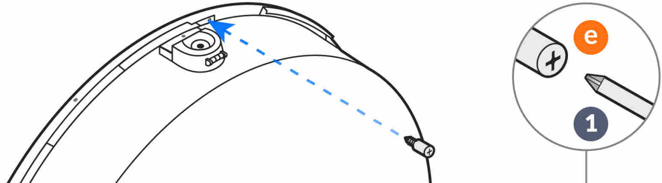

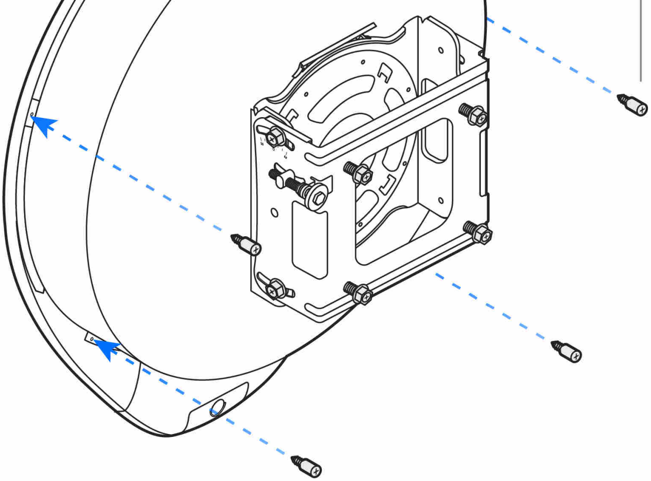

5

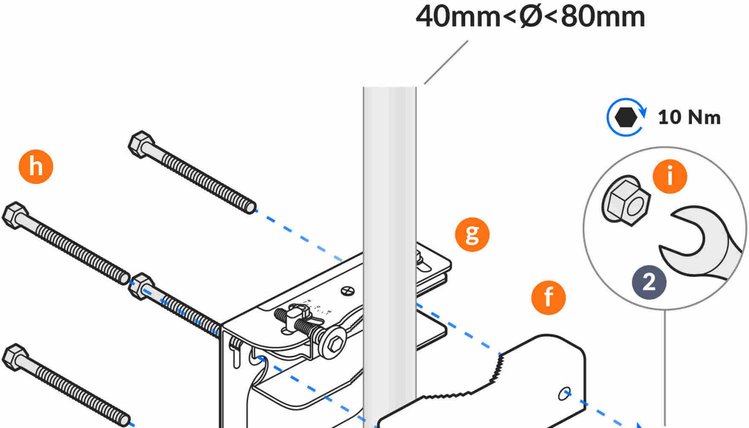
40mm<Ø<80mm
10 Nm
h
g
f
i
2

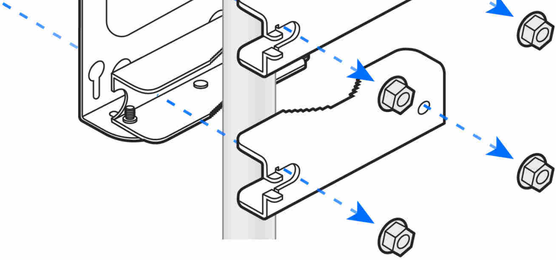

6

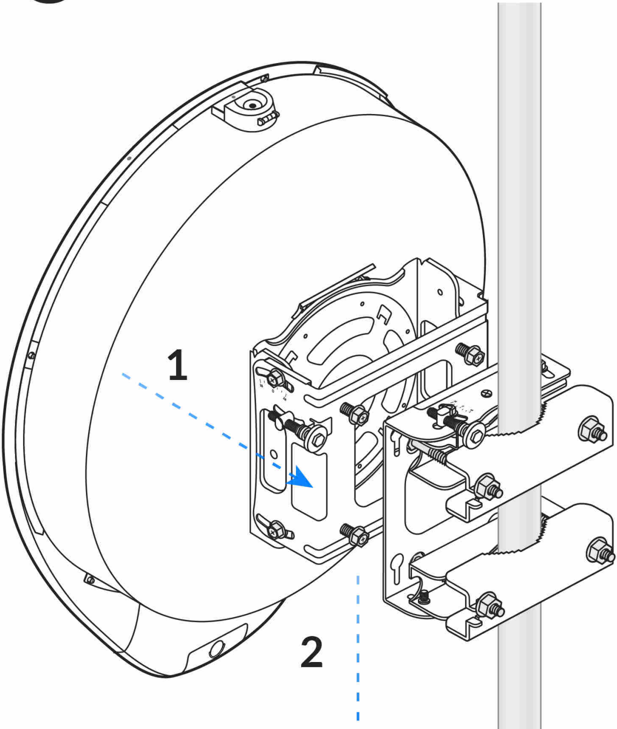

7

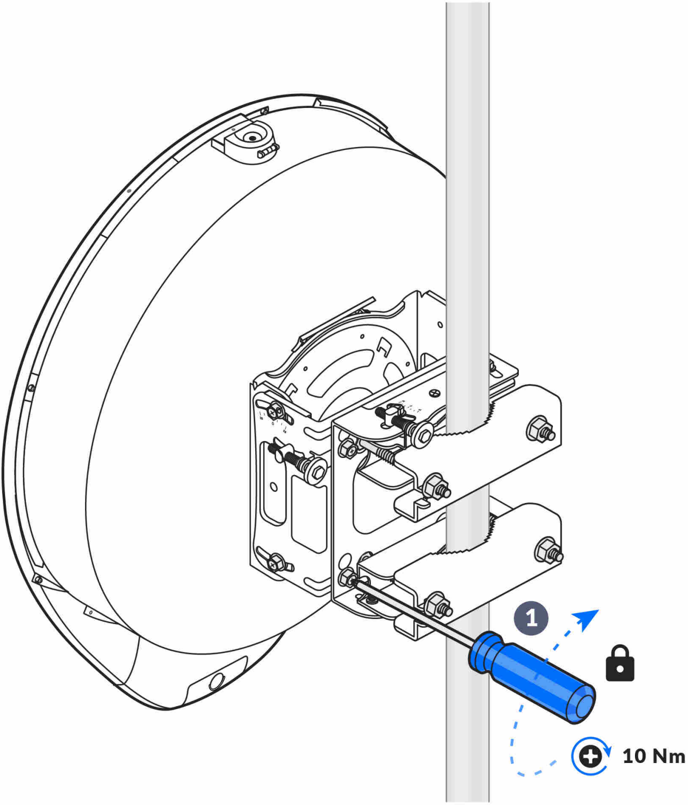

8

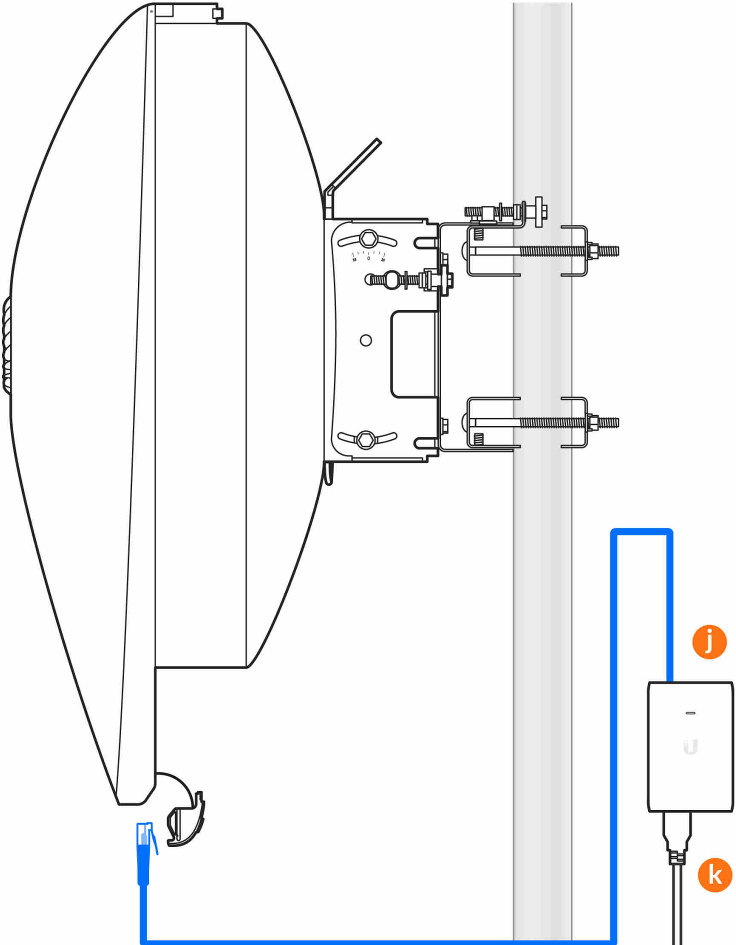

9

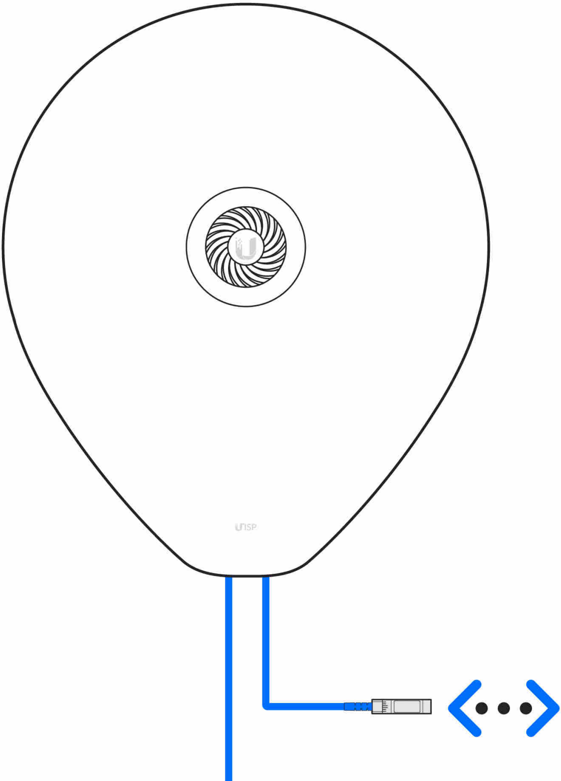

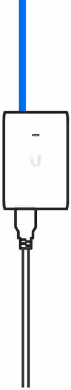

10

Download on the App Store

GET IT ON Google Play

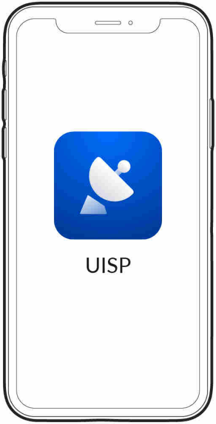

11

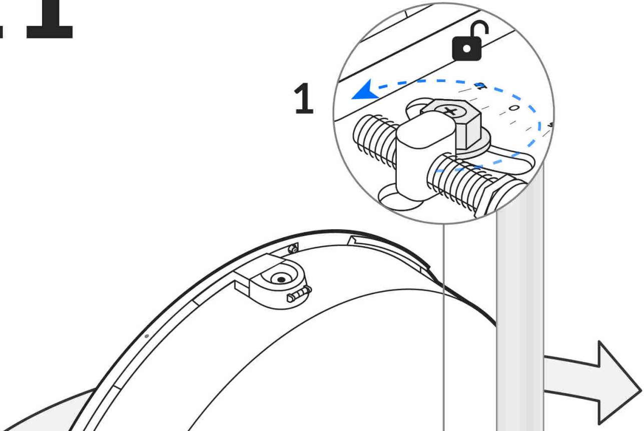

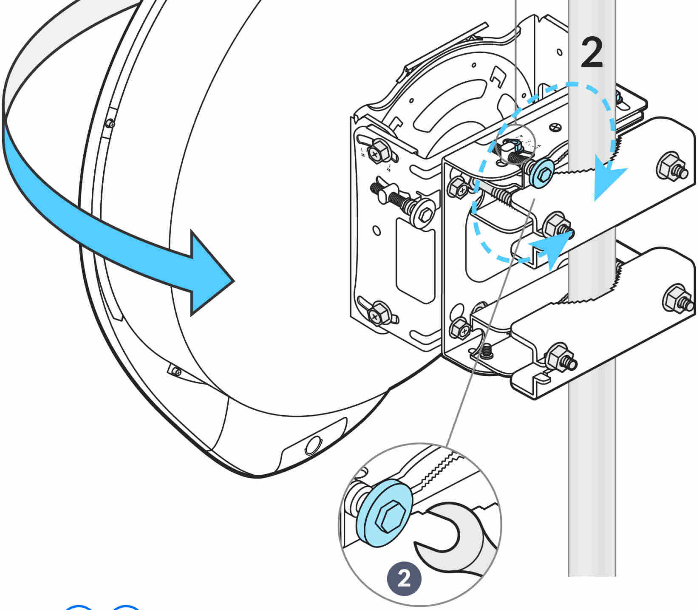

10 Nm

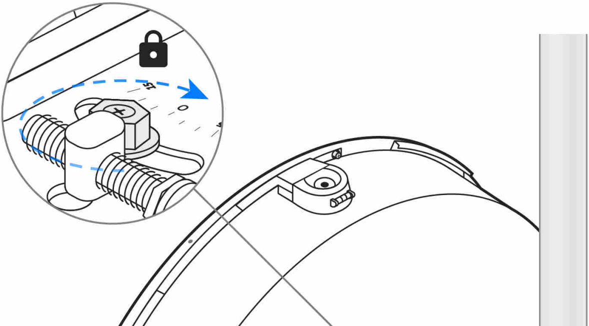

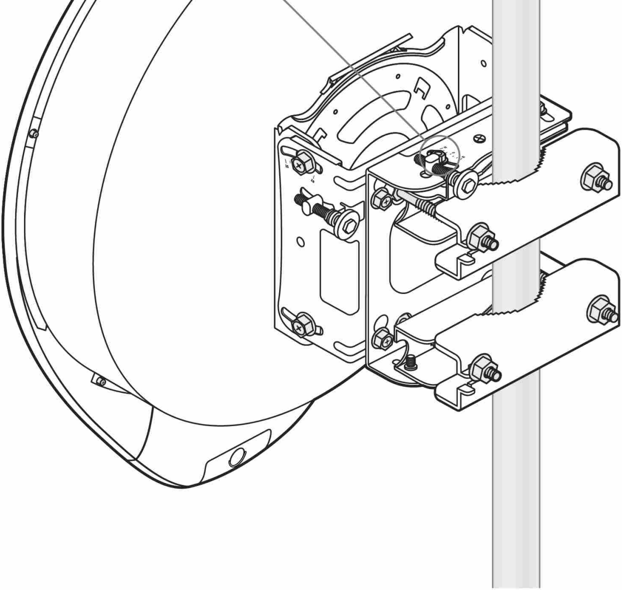

12

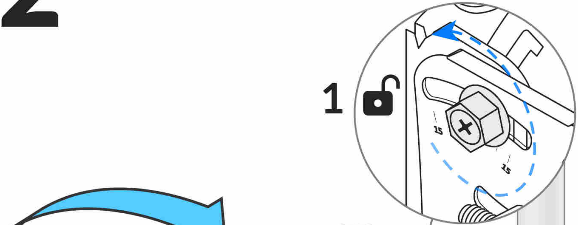

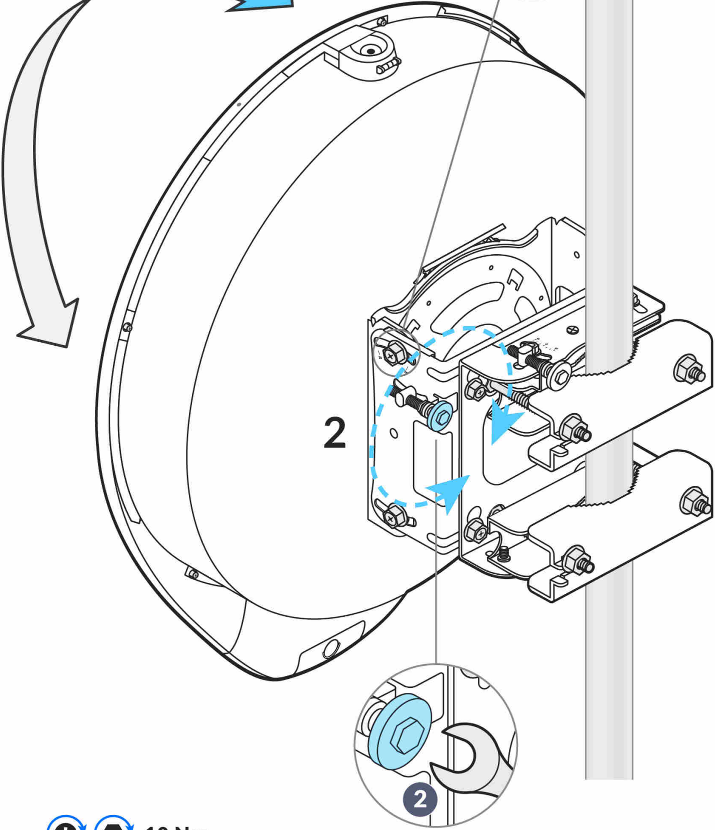

10 Nm

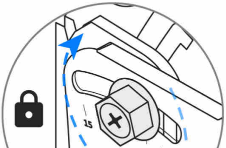

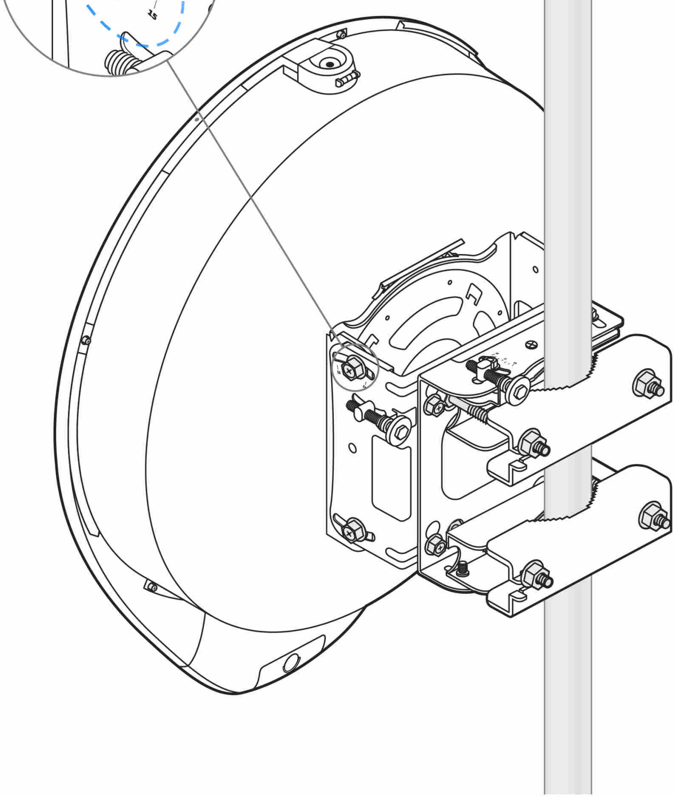

Get Answers
help.ui.com

UI Support

©2020-2021 Ubiquiti Inc. All rights reserved. Ubiquiti, Ubiquiti Networks, the Ubiquiti U logo, UISP, and airFiber are trademarks or registered trademarks of Ubiquiti Inc. in the United States and in other countries. App Store and the Apple logo are trademarks of Apple Inc., registered in the U.S. and other countries. Google Play and the Google Play logo are trademarks of Google LLC. All other trademarks are the property of their respective owners.