UniFi 6 Long-Range

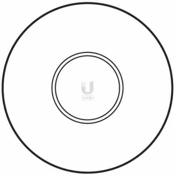

a

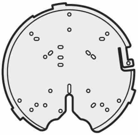

b

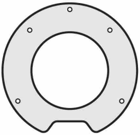

c

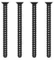

d

e

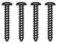

f

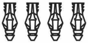

g

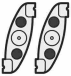

h

i

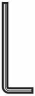

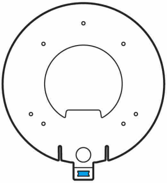

ⓙ ⓚ ⓛ ⓜ

1

Ⓐ

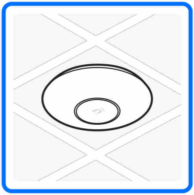

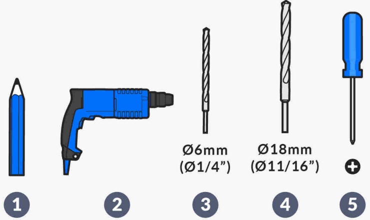
Ø6mm
(Ø1/4")
Ø18mm
(Ø11/16")
⊕
1
2
3
4
5

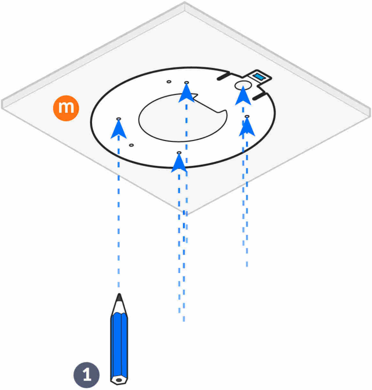

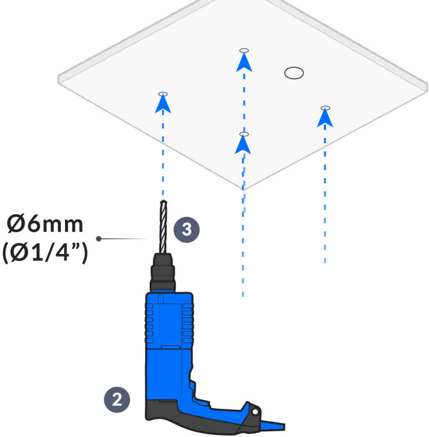

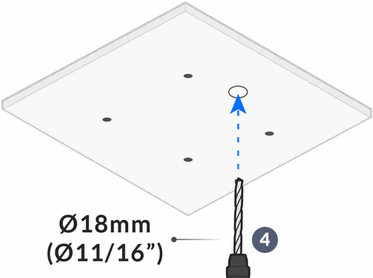
Ø18mm
(Ø11/16”)
4

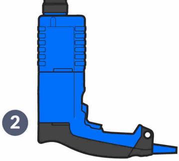

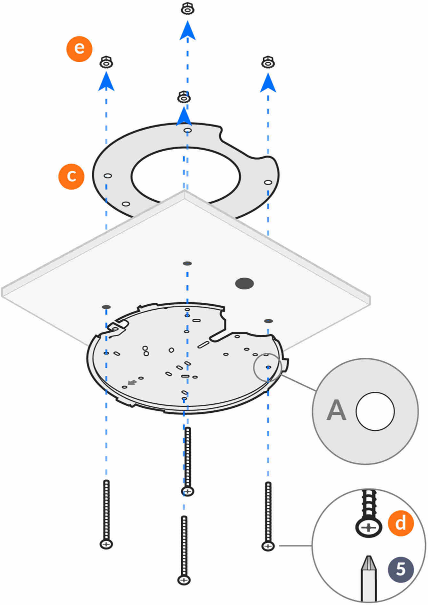

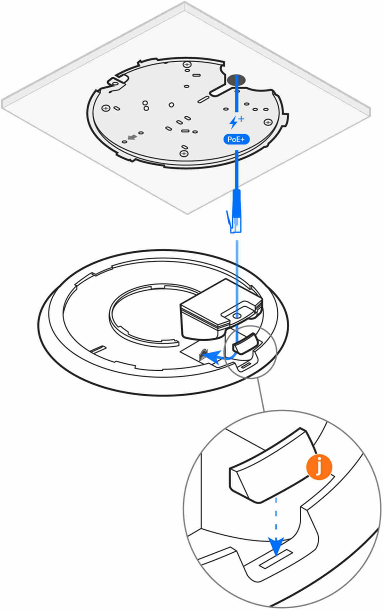

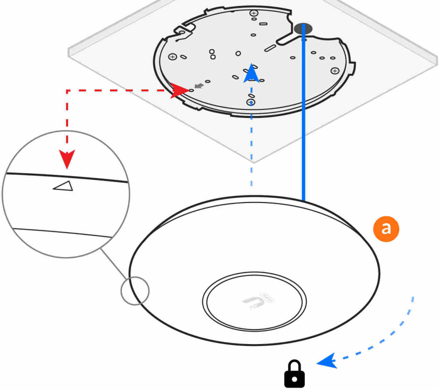

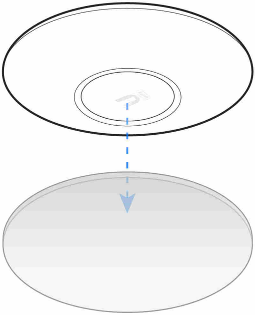

B

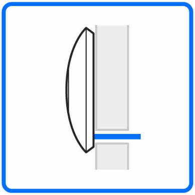

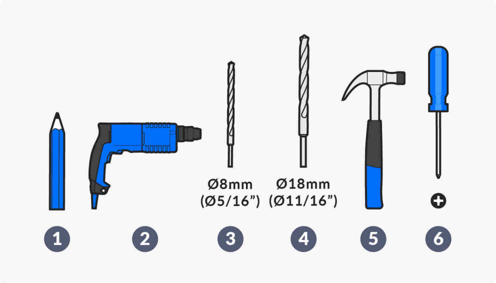

Ø8mm
(Ø5/16")
Ø18mm
(Ø11/16")
1
2
3
4
5
6

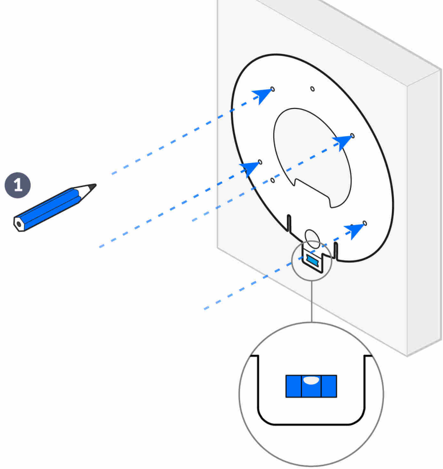

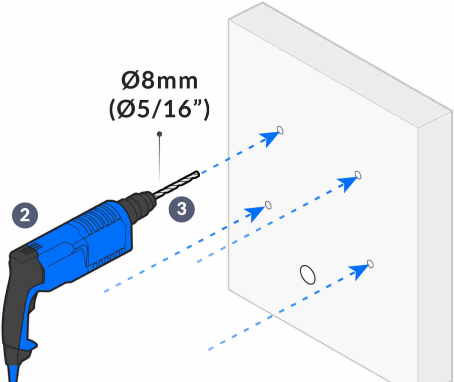
Ø8mm
(Ø5/16”)
2
3

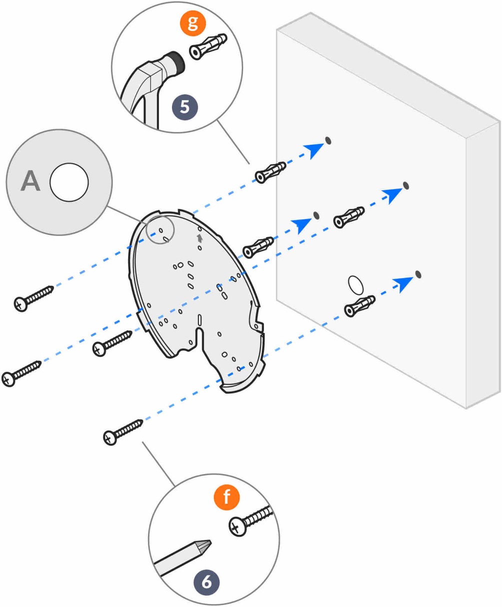

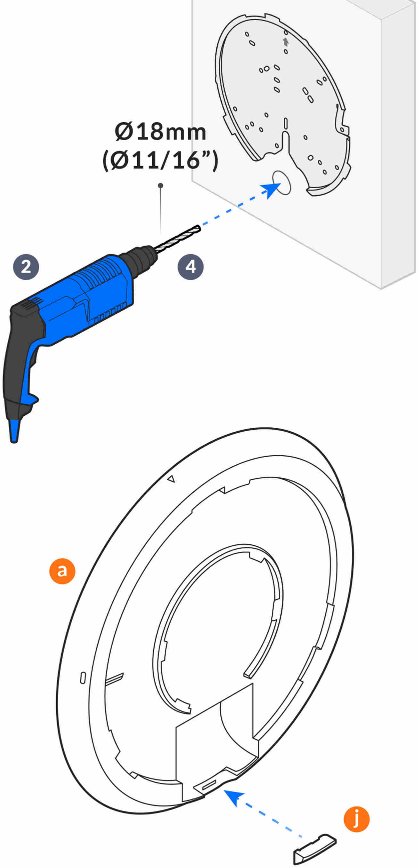
Ø18mm
(Ø11/16”)
2
4
a
j

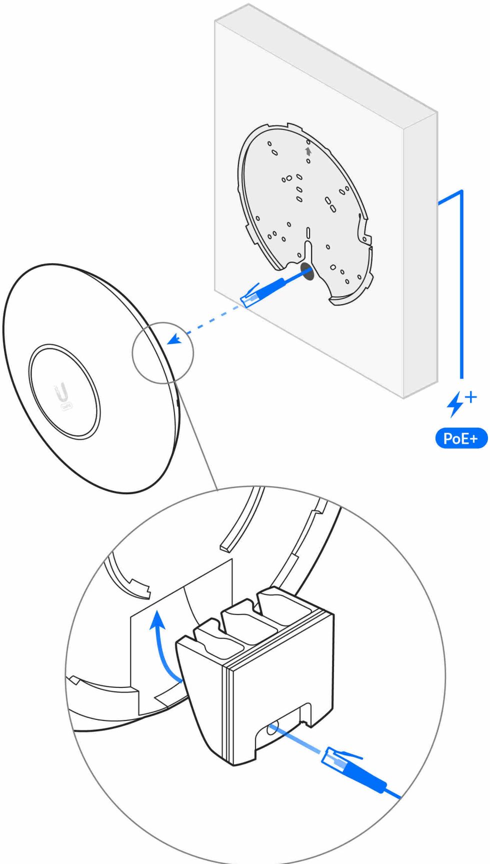

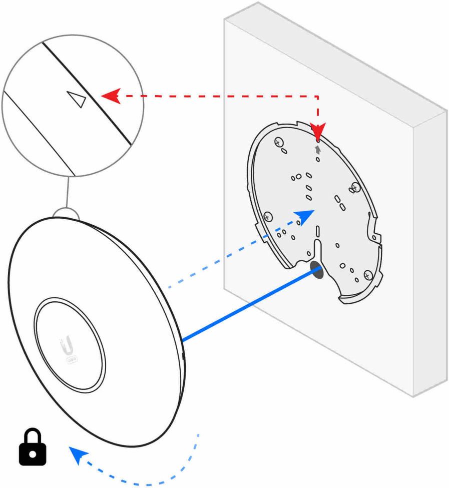

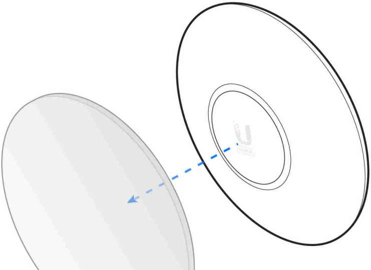

C

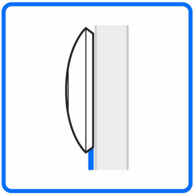

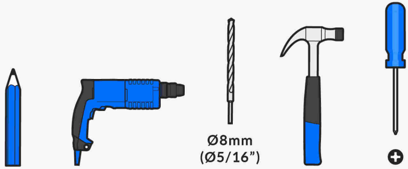

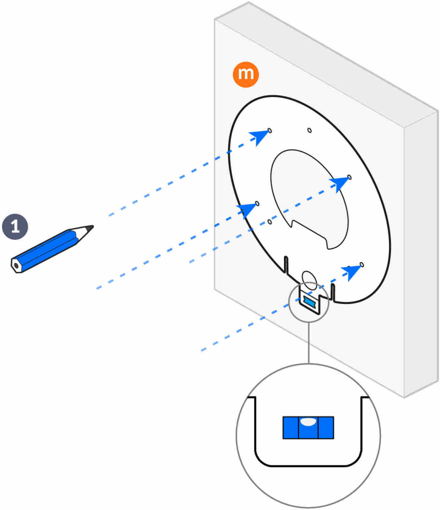

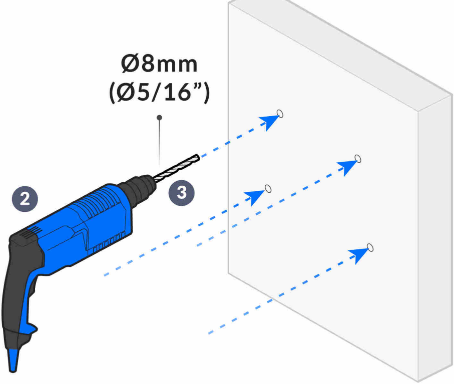
Ø8mm
(Ø5/16")
2
3

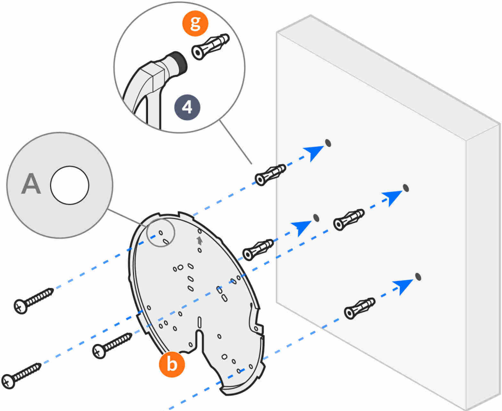

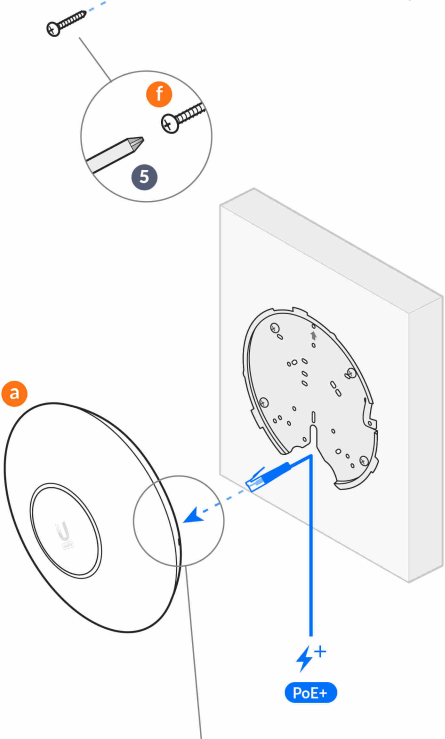

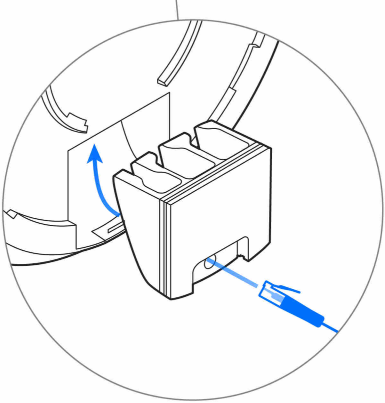

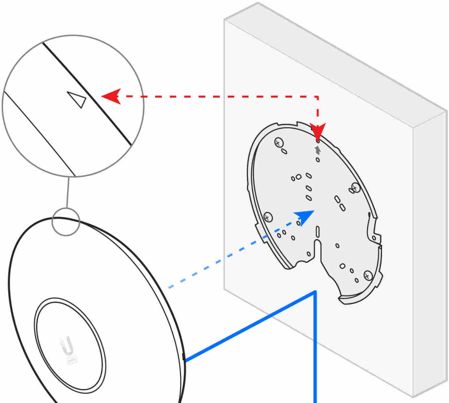

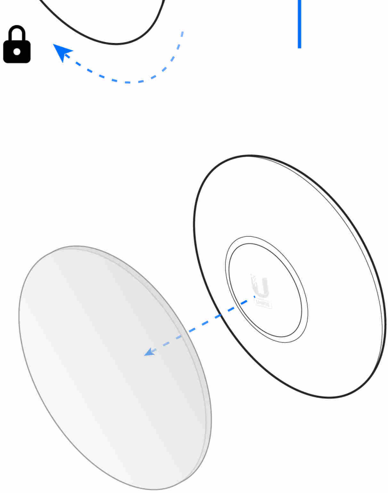

D

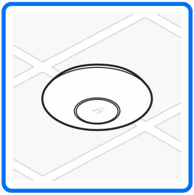

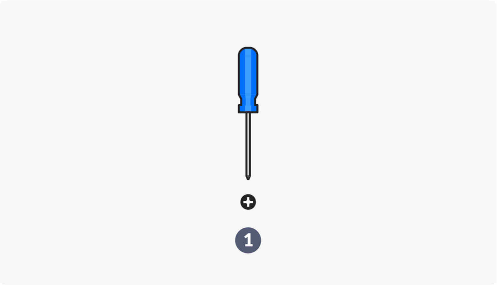

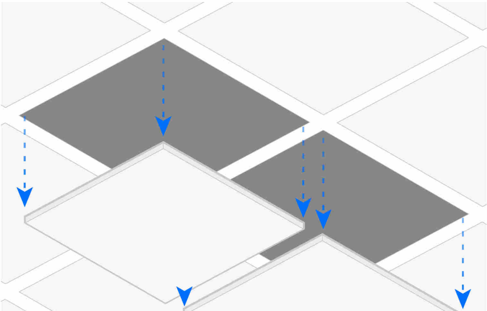

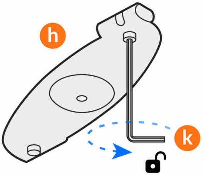

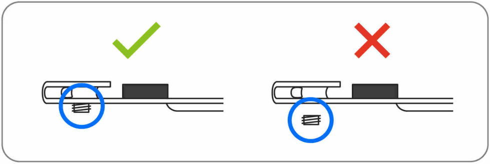

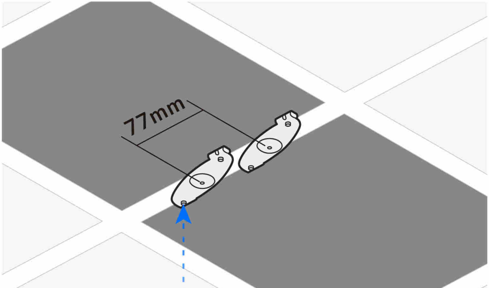

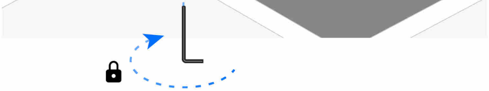

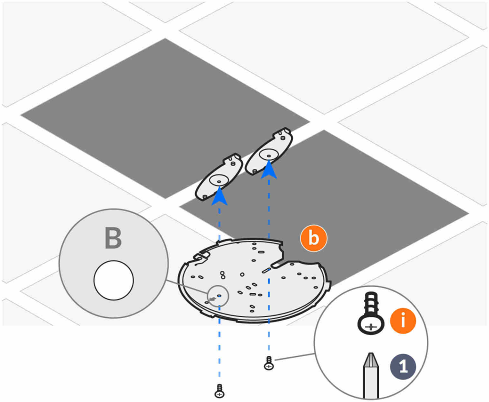

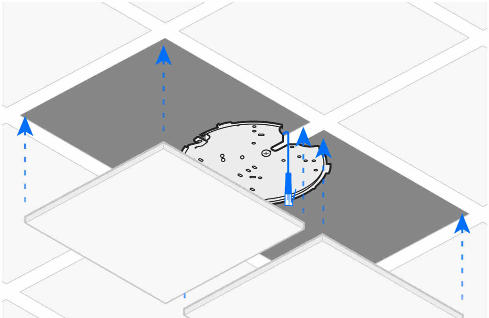

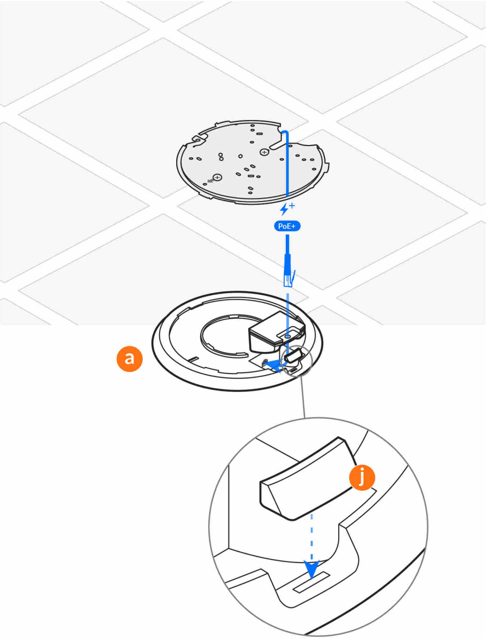

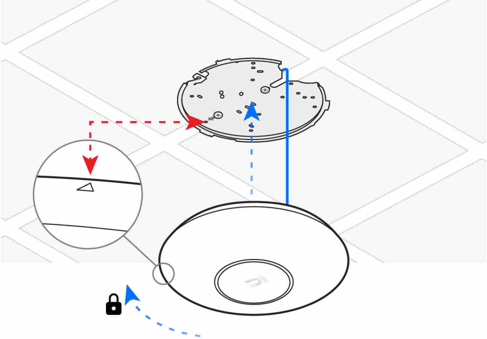

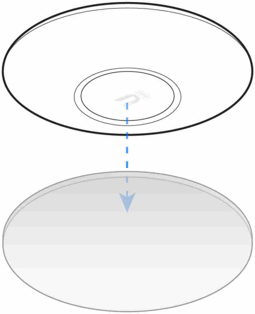

E

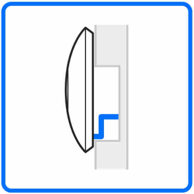

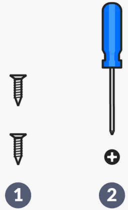

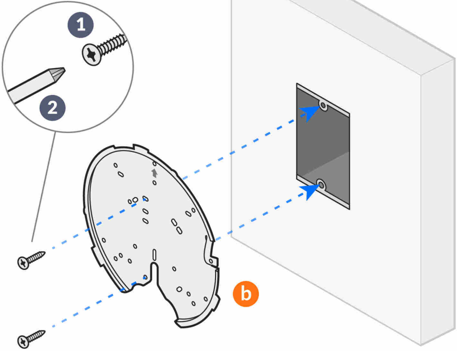

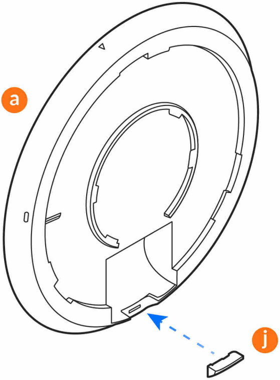

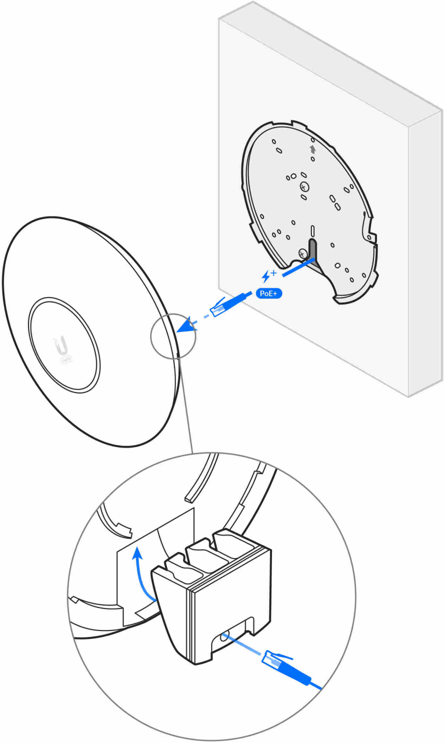

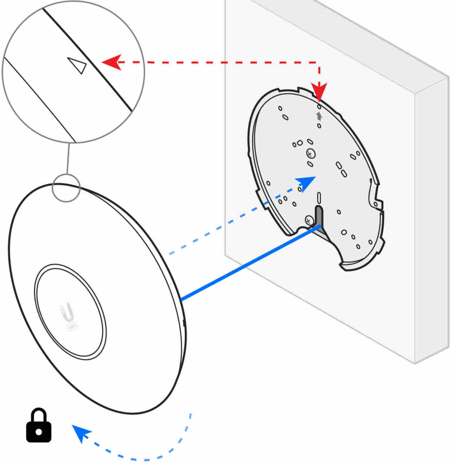

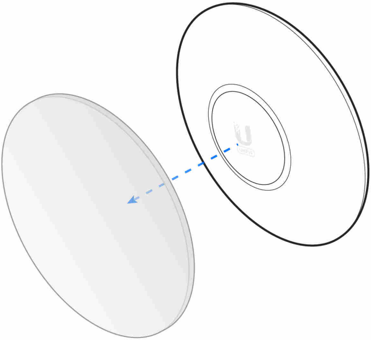

2

Ⓐ

Internet

Gateway

Ⓑ

Wi-Fi

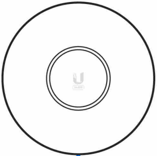

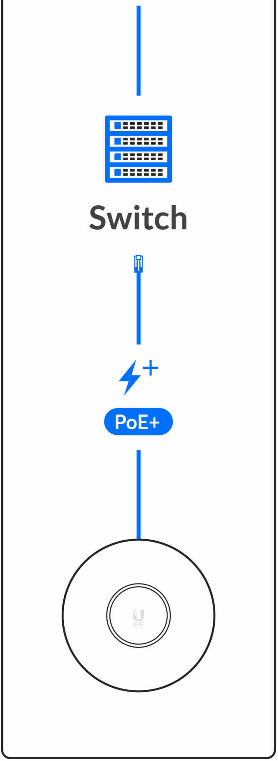

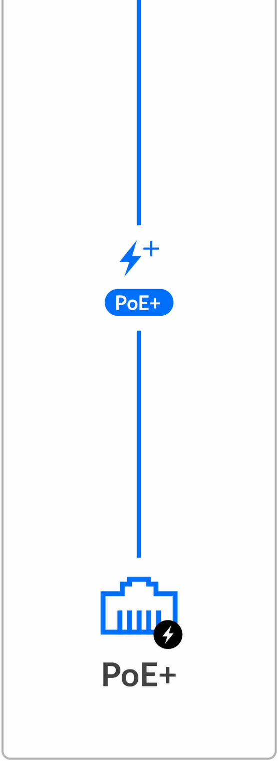

3

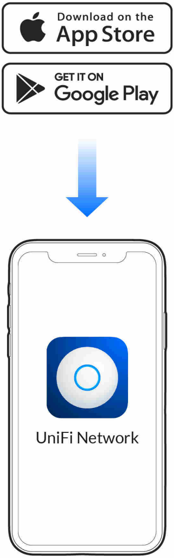
Download on the
App Store
GET IT ON
Google Play
UniFi Network

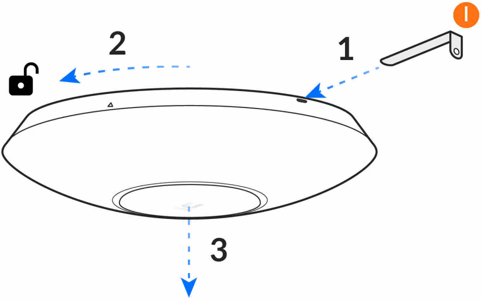

UniFi Network

🔗

Get Answers
help.ui.com

UI Support

🔗