Product Data Sheet - Eddy

bouncepad®

Colour:

White
Black
Green

Mounting:

Fixing from **Above**

Fixing from **Below**

Packaged weight:

1.55kg

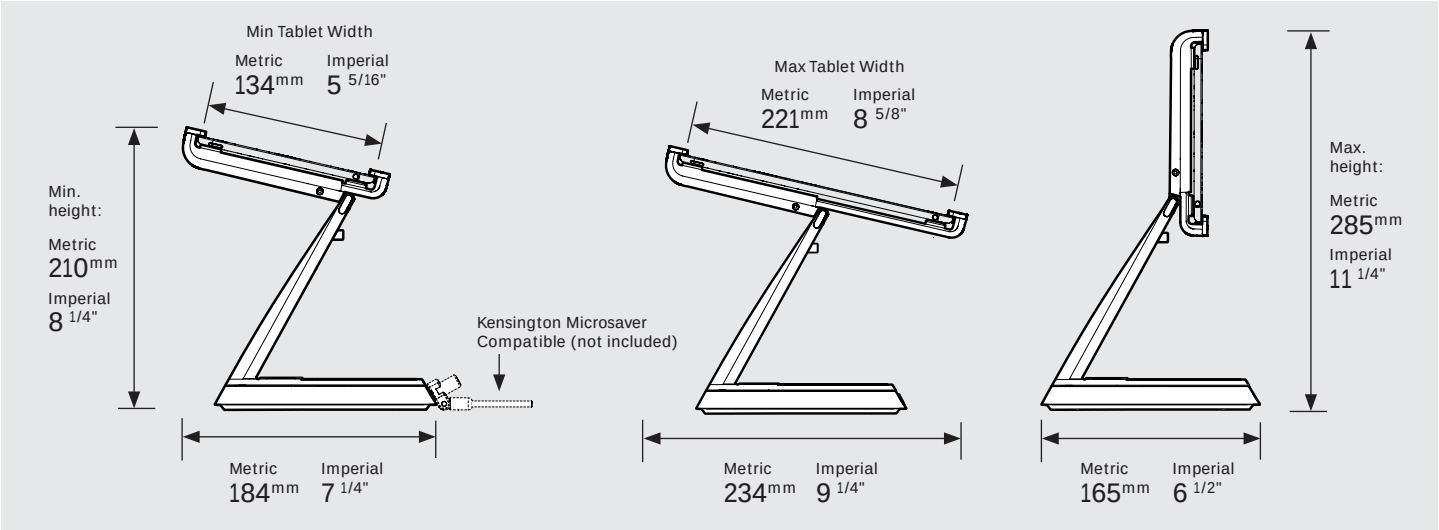

Mounting:
Fixing from Above

Mounting:
Fixing from Below

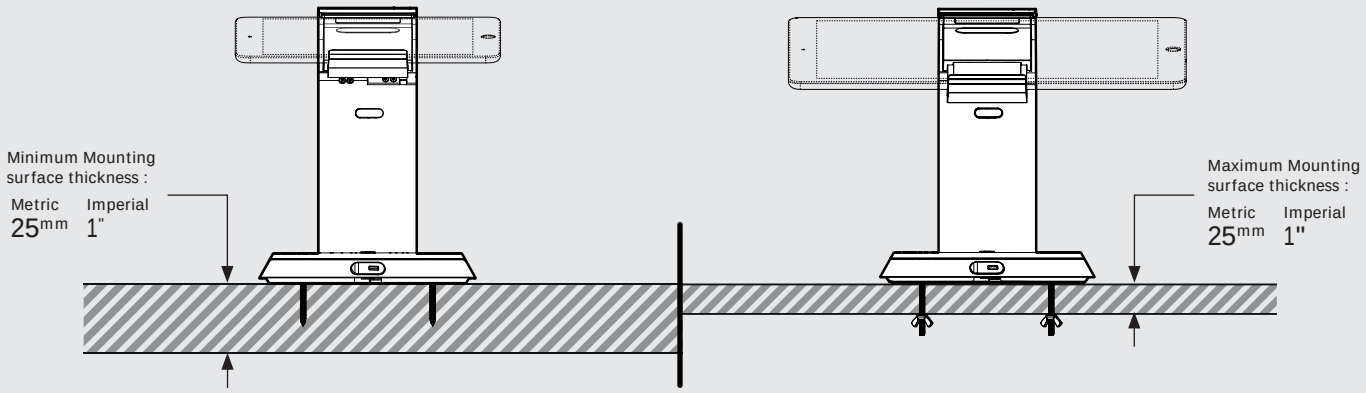

Parts in the Box

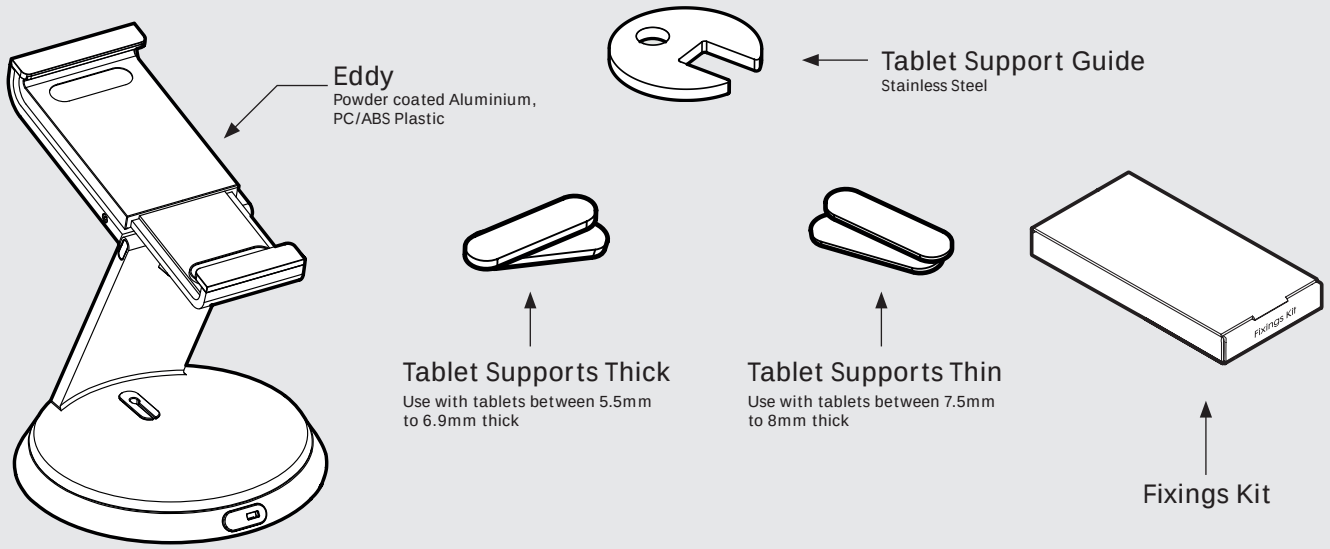

Sheet Code: BP-DAT-EDDY_REV1
Release Date: 19/06/2020

Copyright 2020 Spotspot Ltd. (T/A Bouncepad) all rights reserved.
Con□dential, no part of this publication may be reproduced or transmitted in any form without the written permission of the copyright holder.