a

b

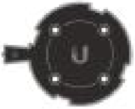

c

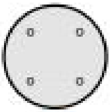

d

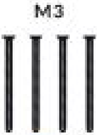

e

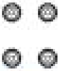

f

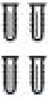

g

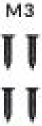

h

i

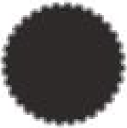

j

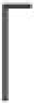

k

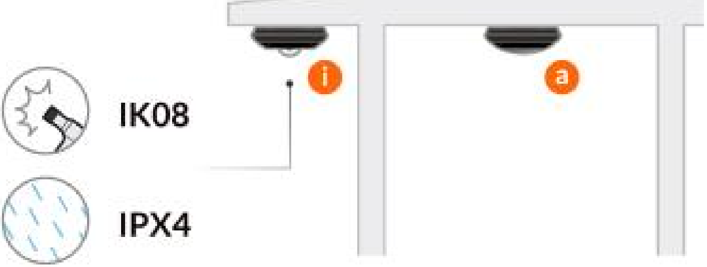
i
a
IK08
IPX4

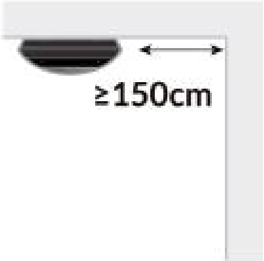

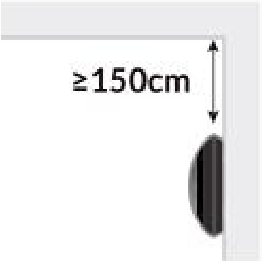

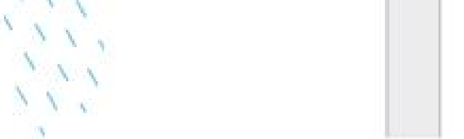

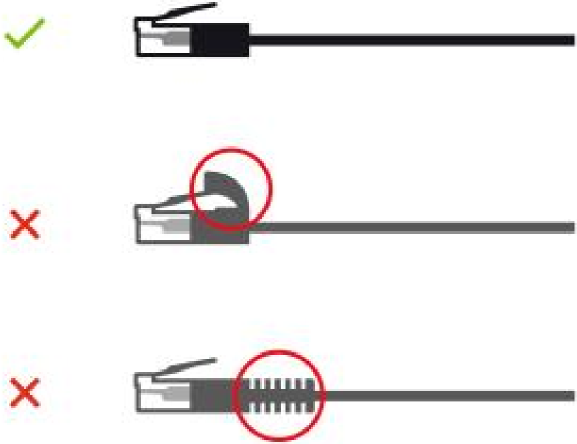

1

A

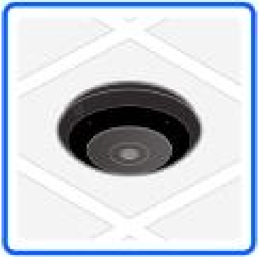

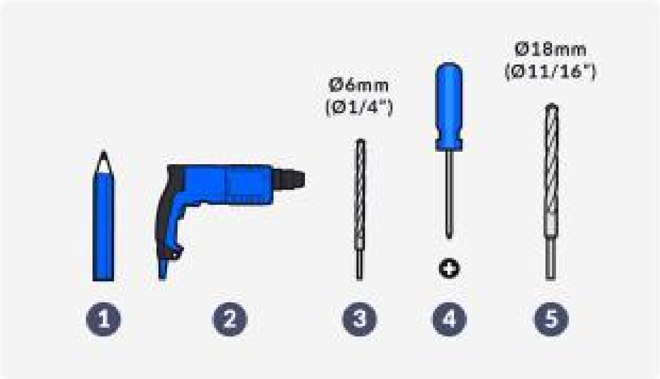
Ø6mm
(Ø1/4")
Ø18mm
(Ø11/16")
1
2
3
4
5

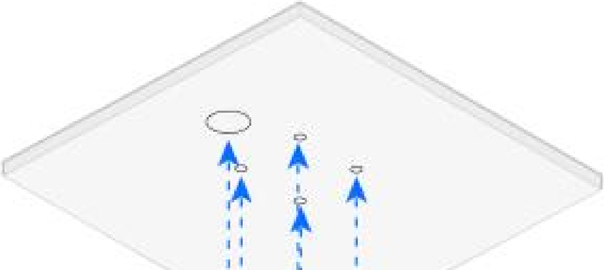

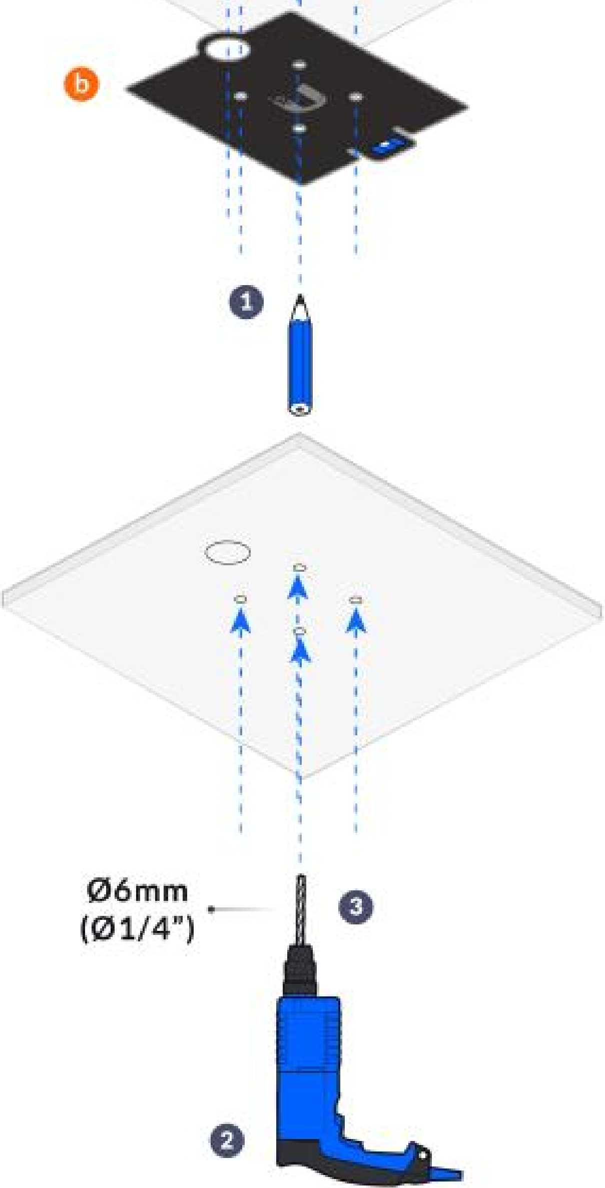
b
1
Ø6mm
(Ø1/4")
3
2

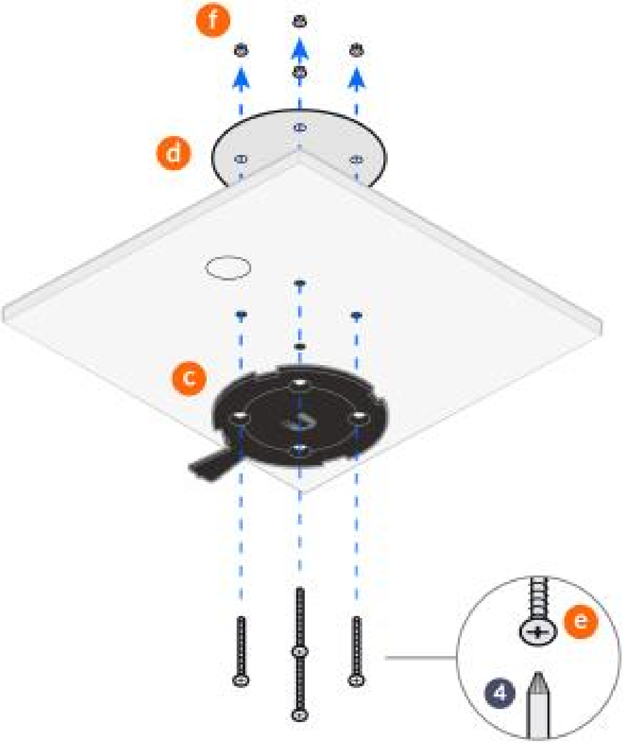

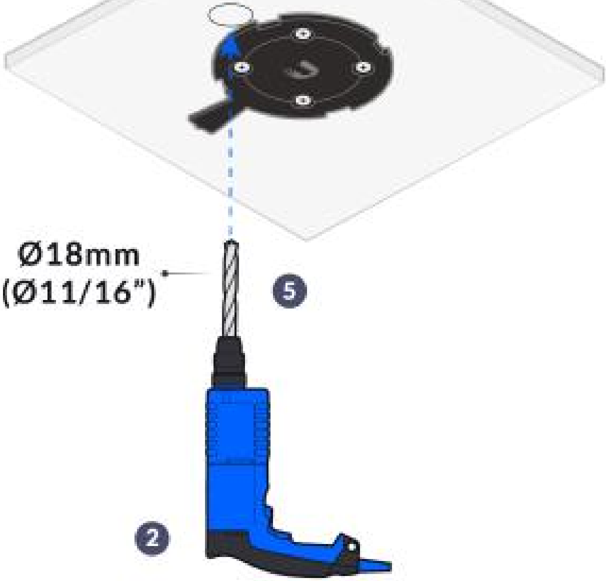
Ø18mm
(Ø11/16")
5
2

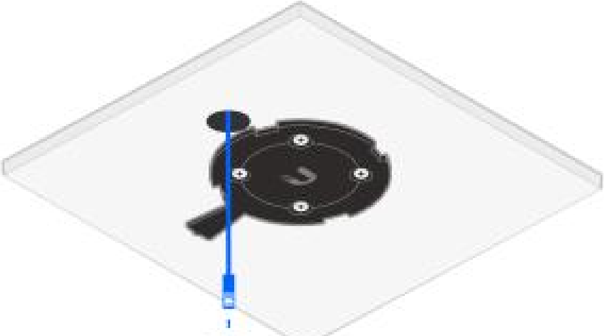

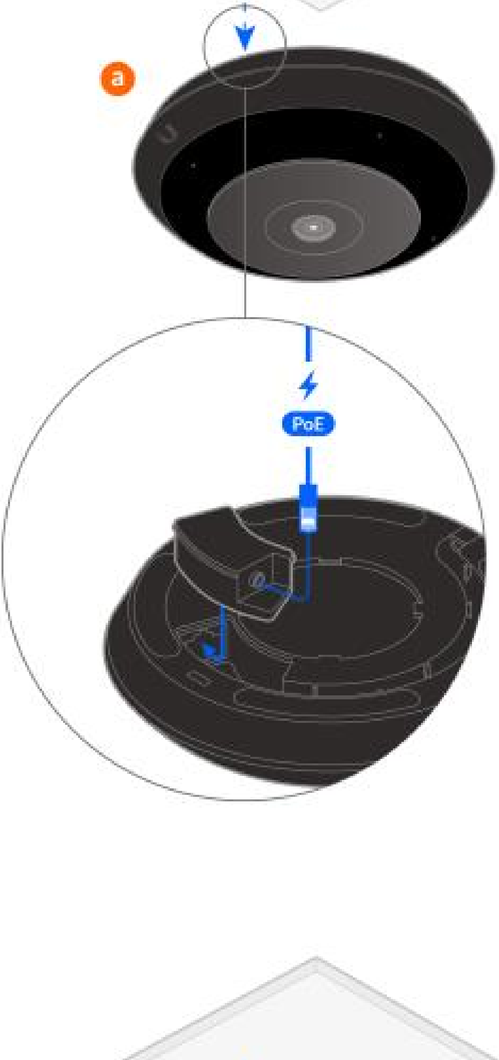

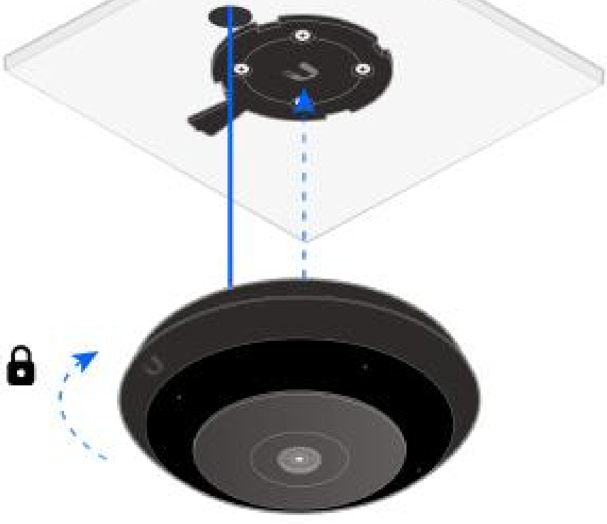

B

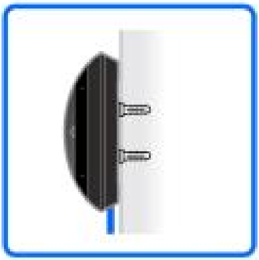

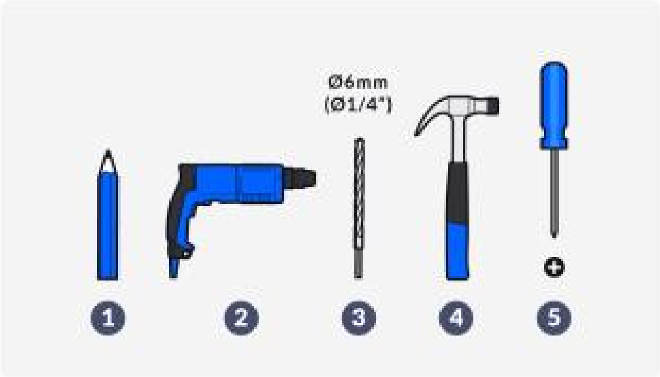
Ø6mm
(Ø1/4")
1
2
3
4
5

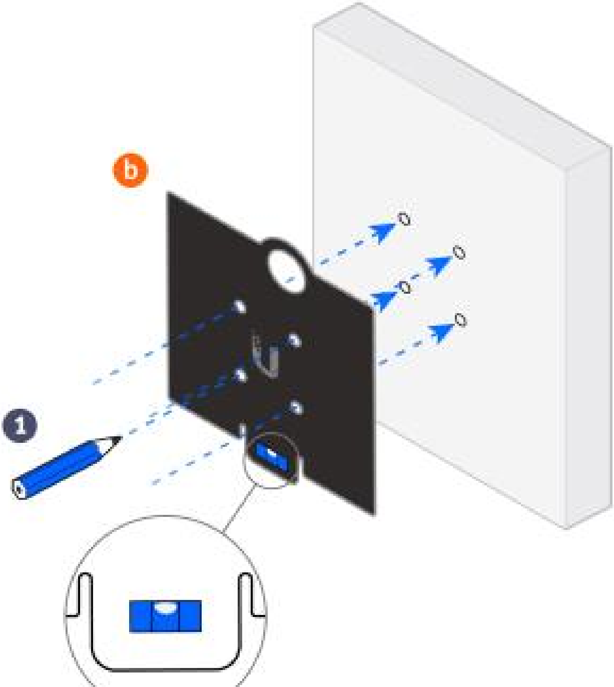

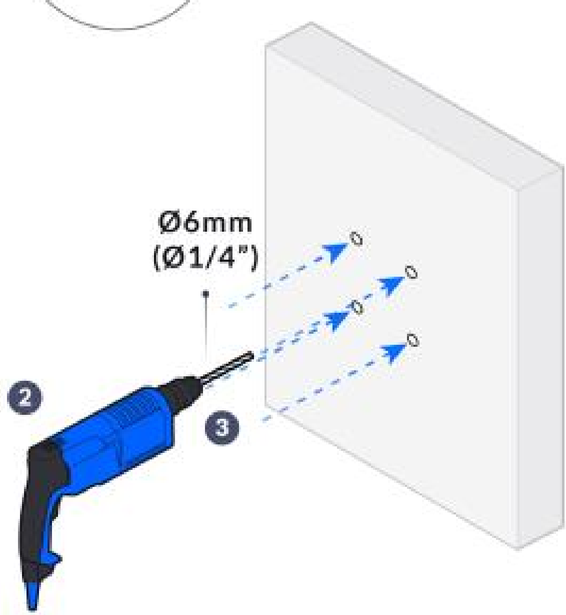

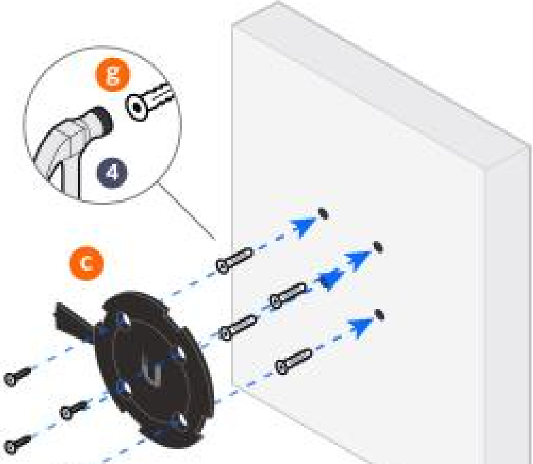

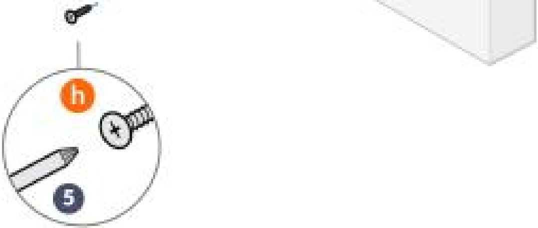

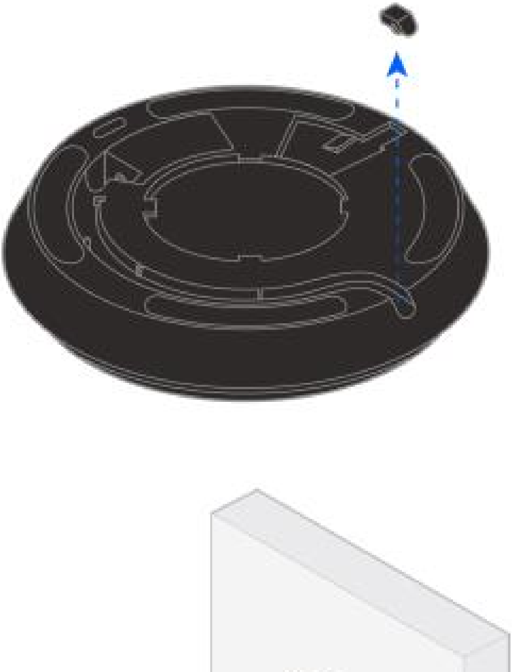

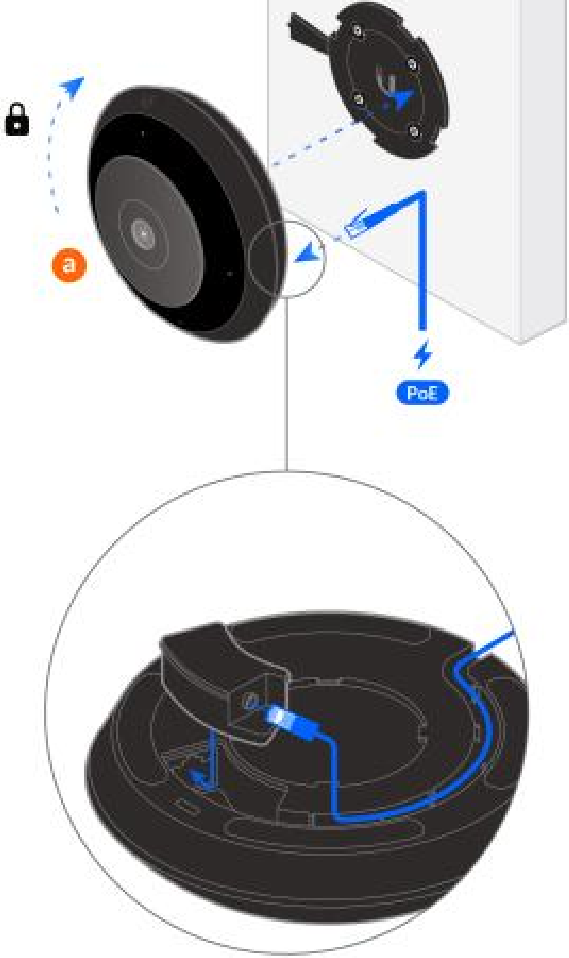

C

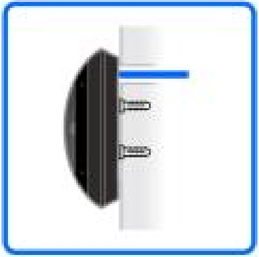

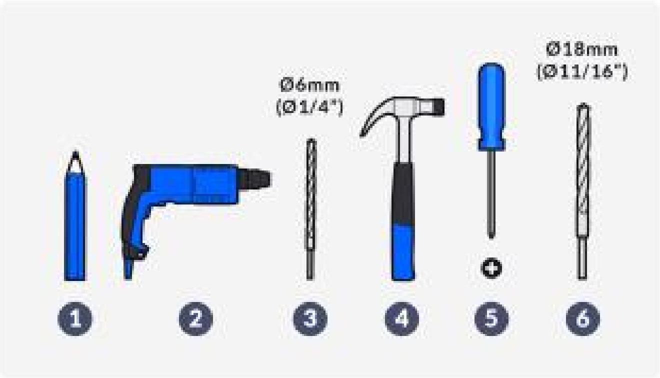
Ø6mm
(Ø1/4")
Ø18mm
(Ø11/16")
1
2
3
4
5
6

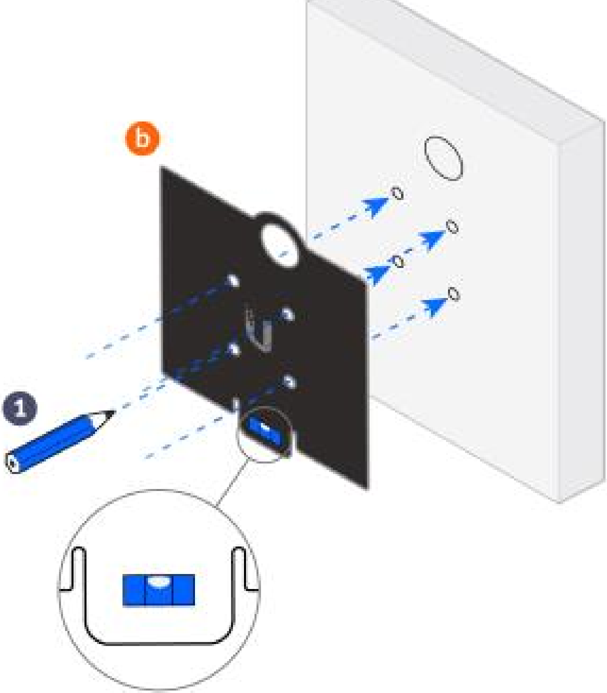

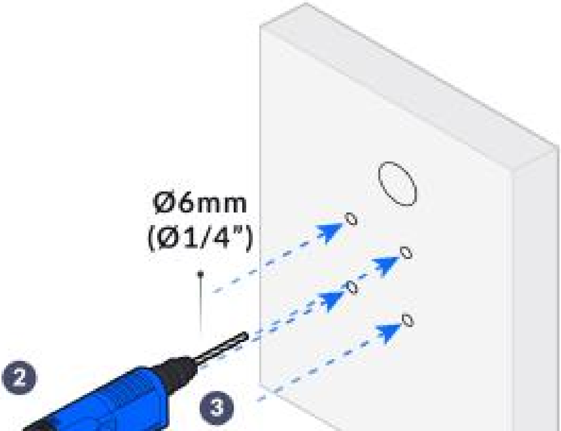

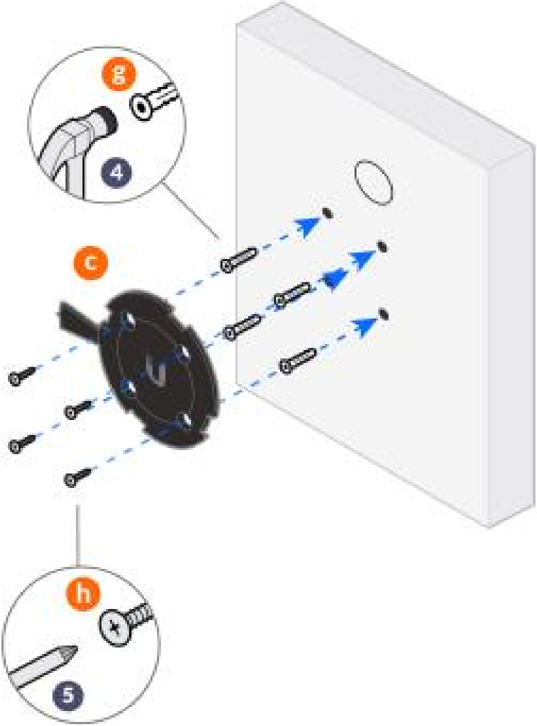

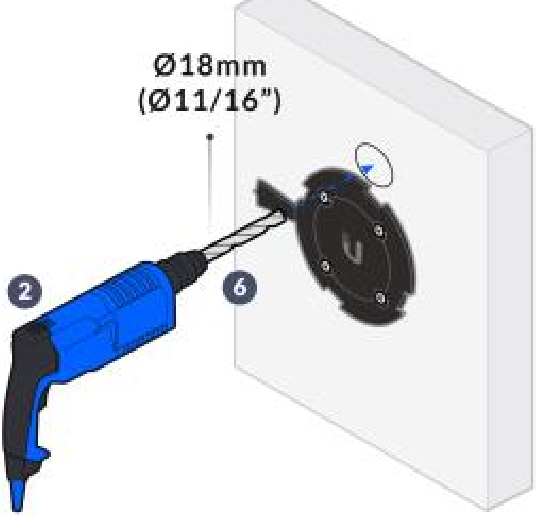
Ø18mm
(Ø11/16")
2
6

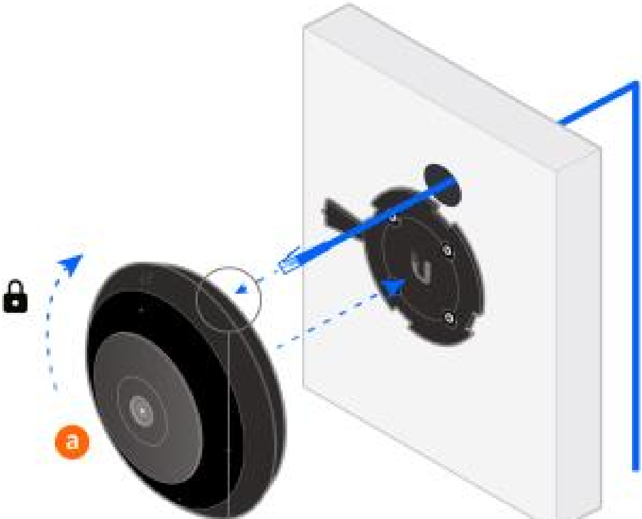

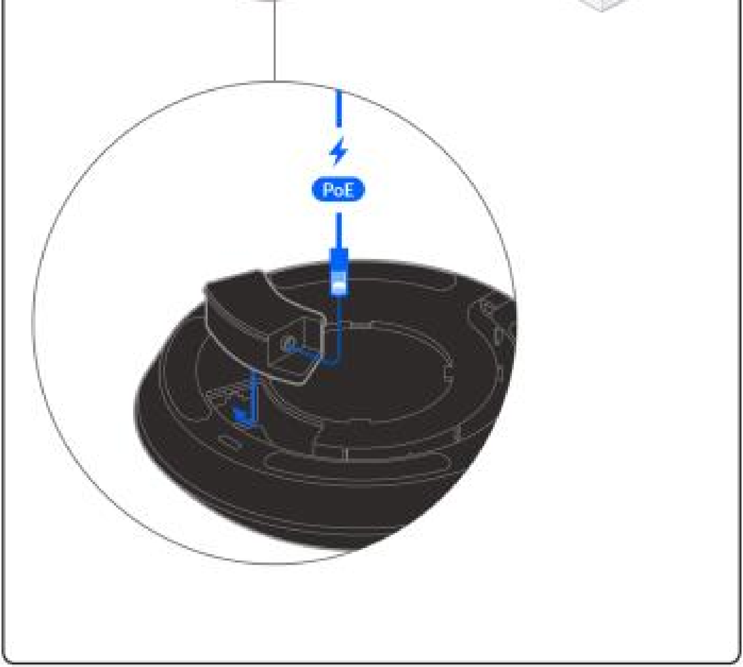

2

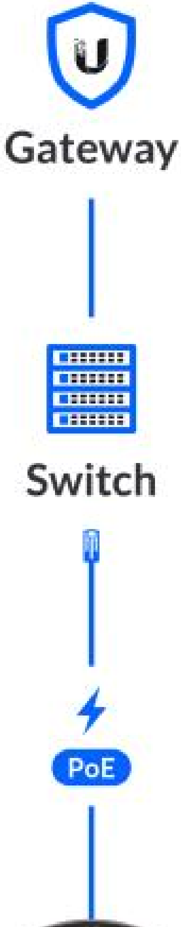
Gateway
Switch
PoE

3

Download on the App Store

GET IT ON Google Play

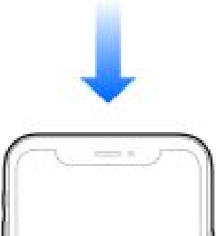

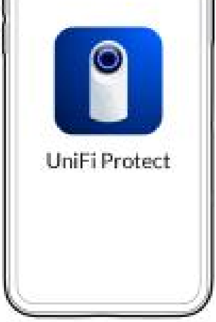
UniFi Protect

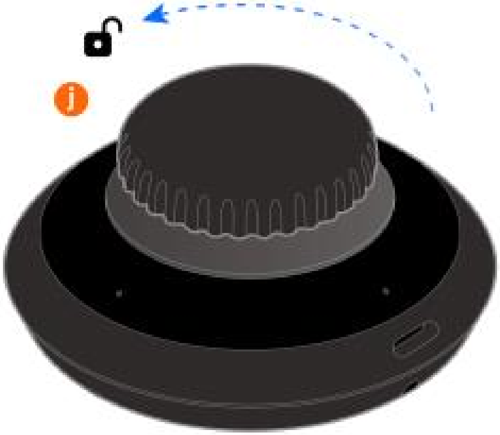

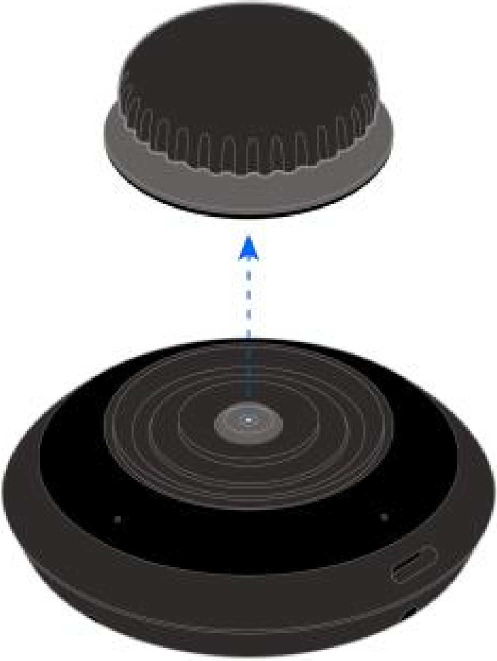

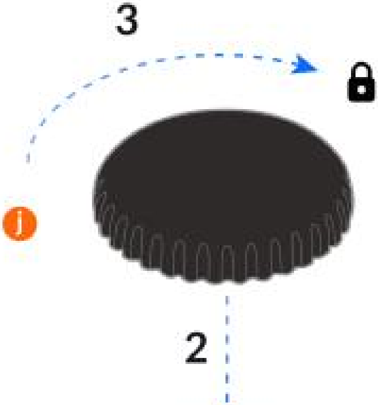

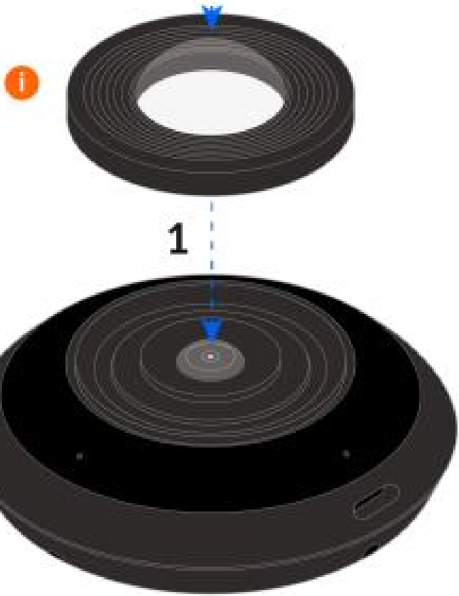

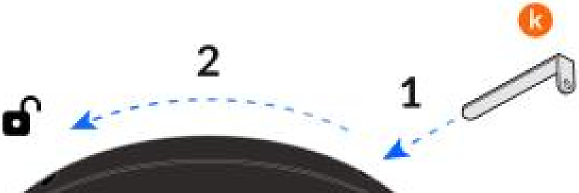

UniFi Protect

🔗

Get Answers
help.ui.com

UI Support

🔗

[illegible]