Access Point U6+

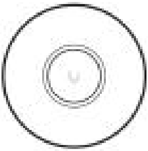
a

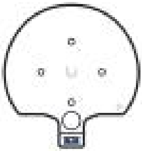
b

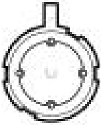
c

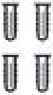
d

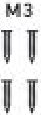

e

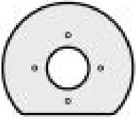
f

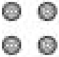
g

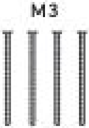

h

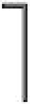
i

1

A

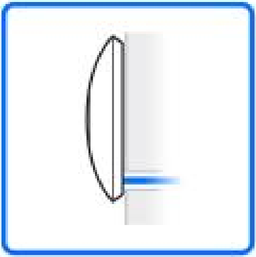

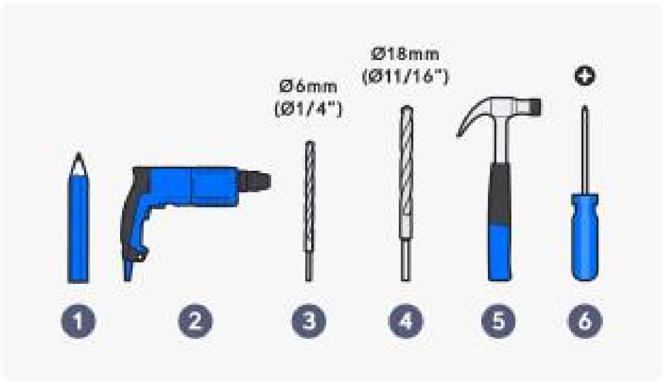
Ø6mm
(Ø1/4")
Ø18mm
(Ø11/16")
1
2
3
4
5
6

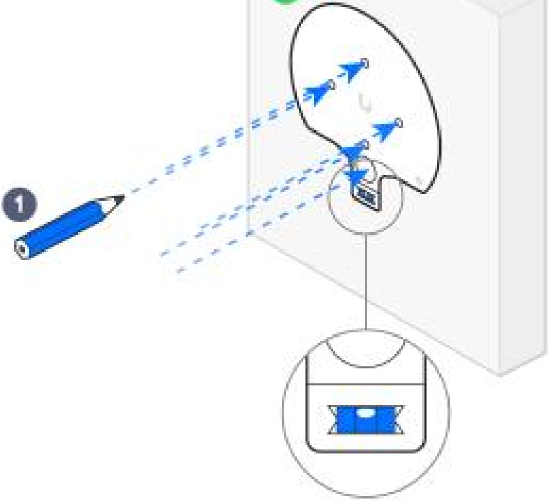

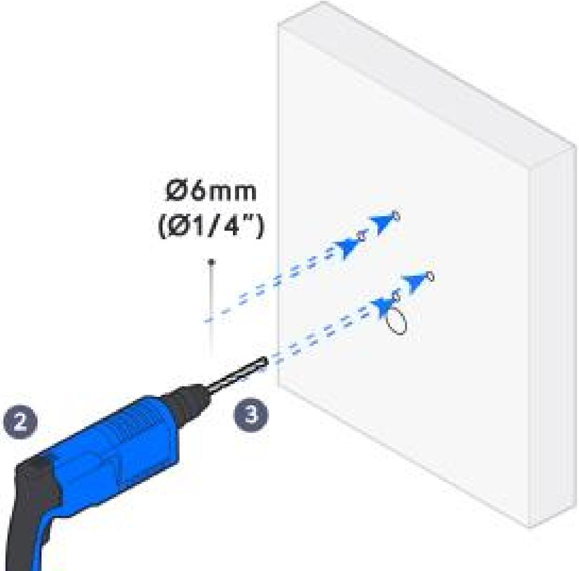

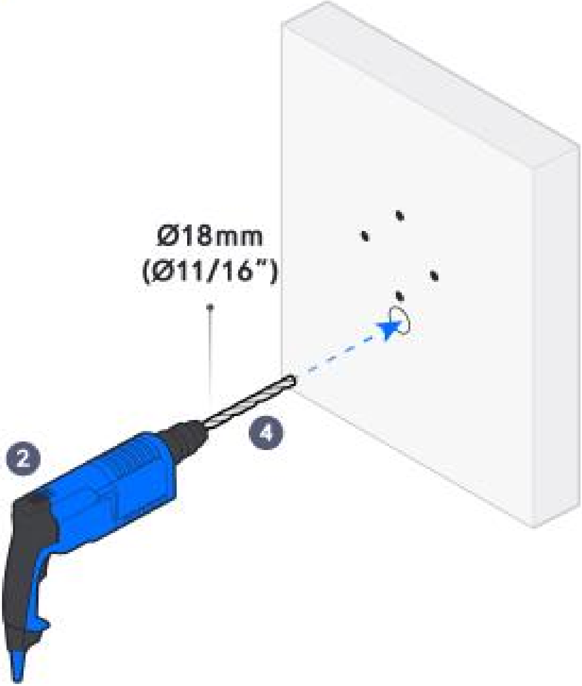
Ø18mm
(Ø11/16”)
2
4

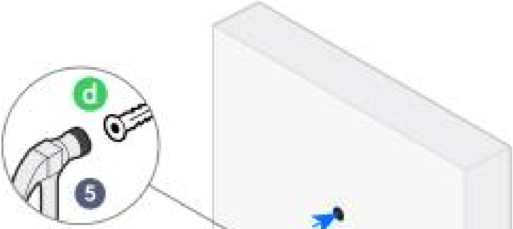

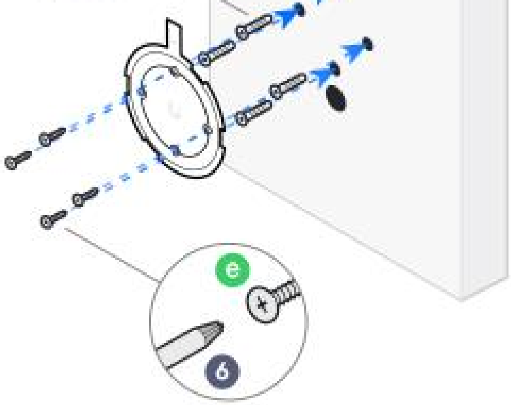

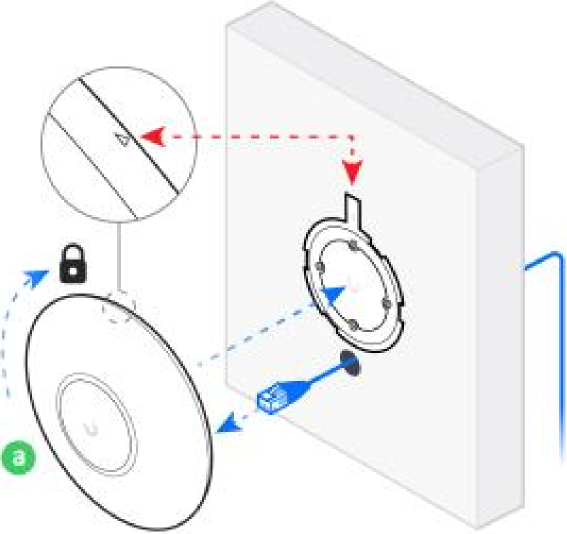

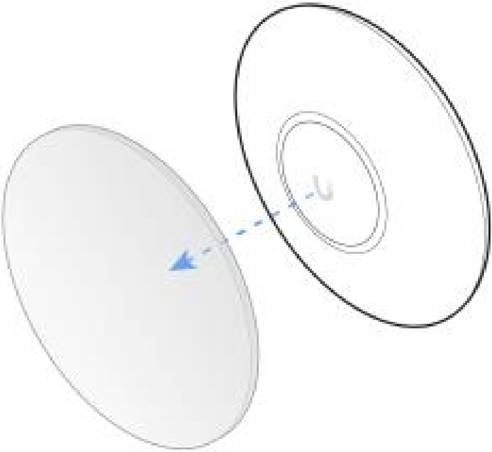

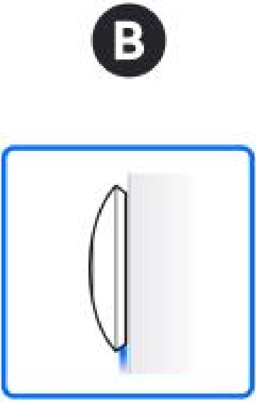

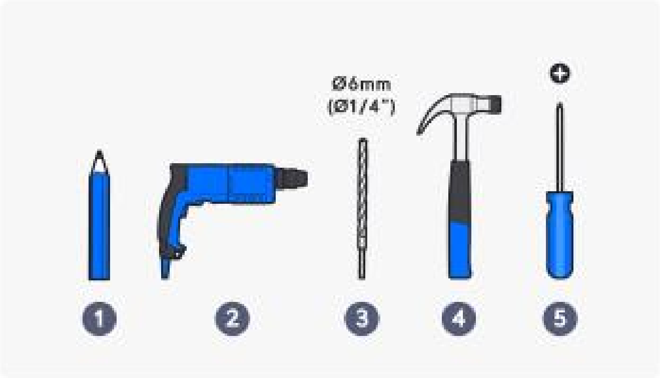
Ø6mm
(Ø1/4")
1
2
3
4
5

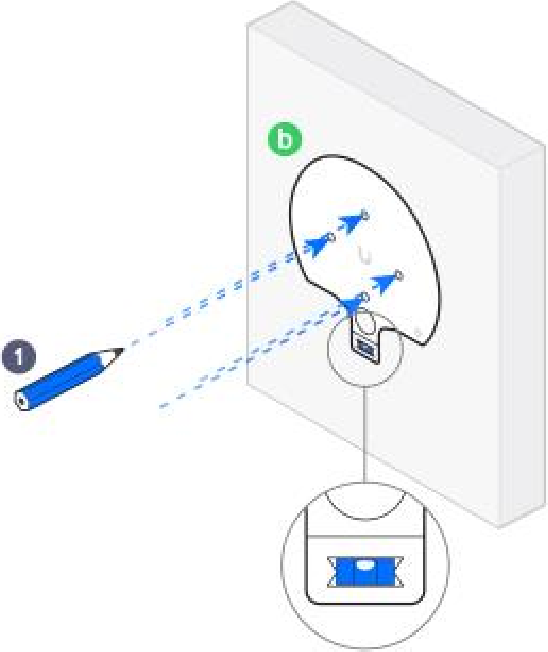

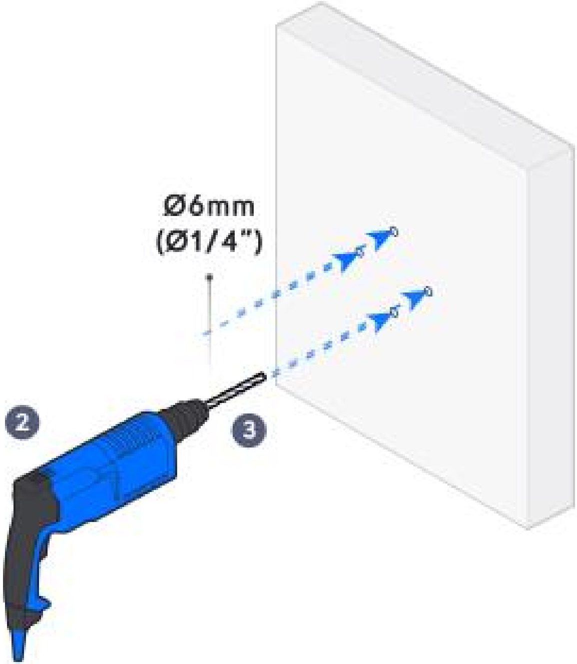

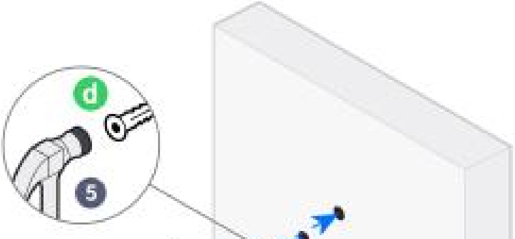

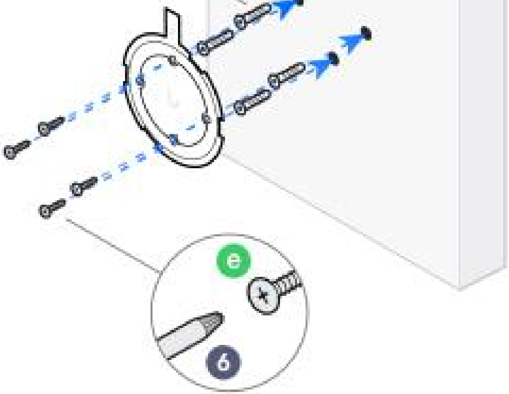

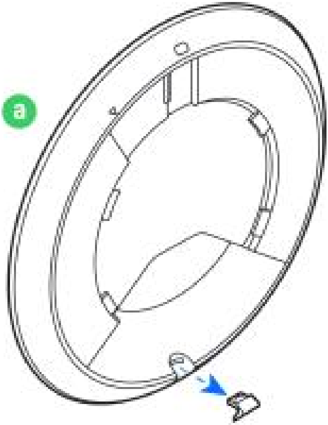

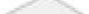

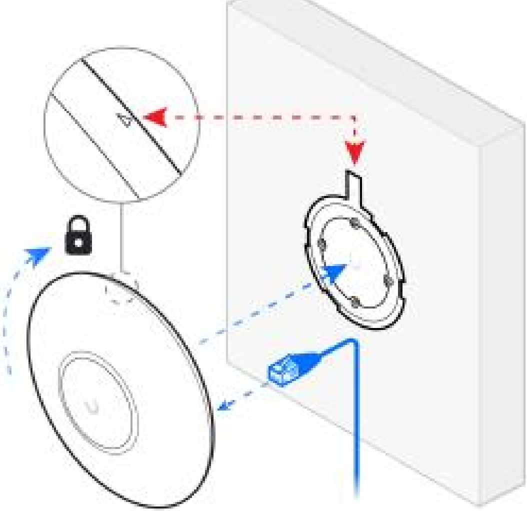

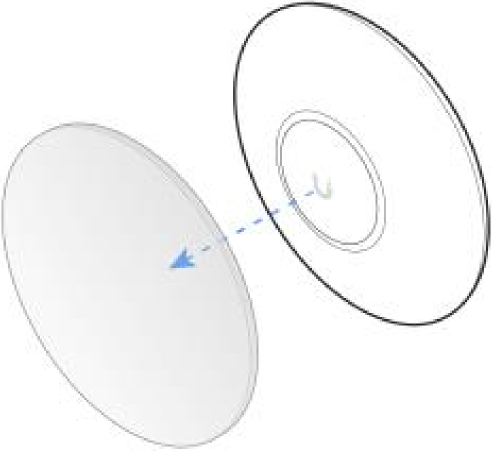

C

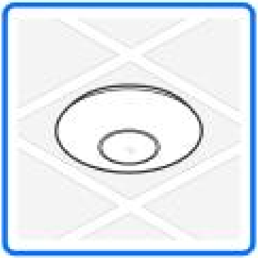

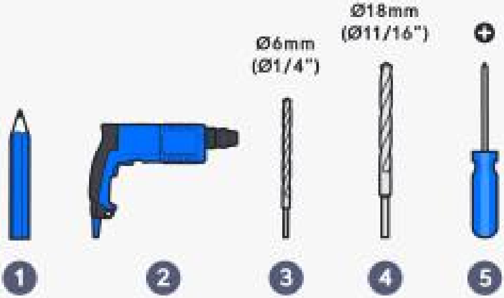
Ø6mm
(Ø1/4")
Ø18mm
(Ø11/16")
1
2
3
4
5

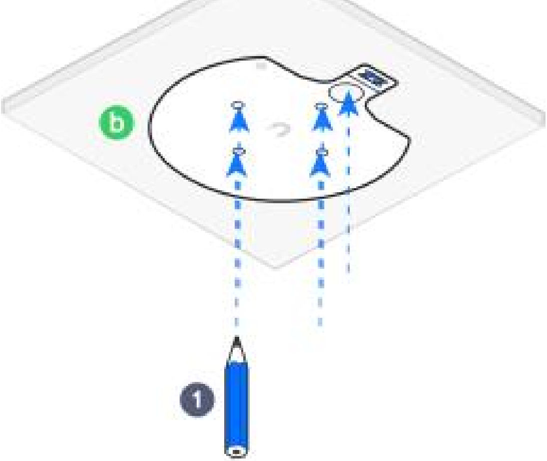

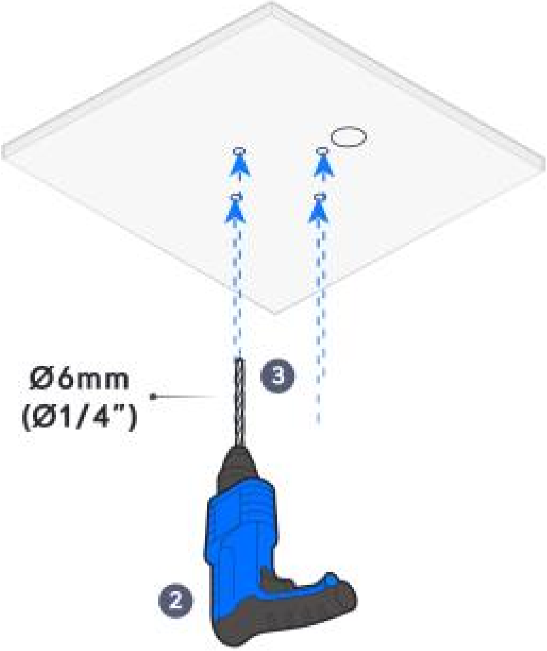

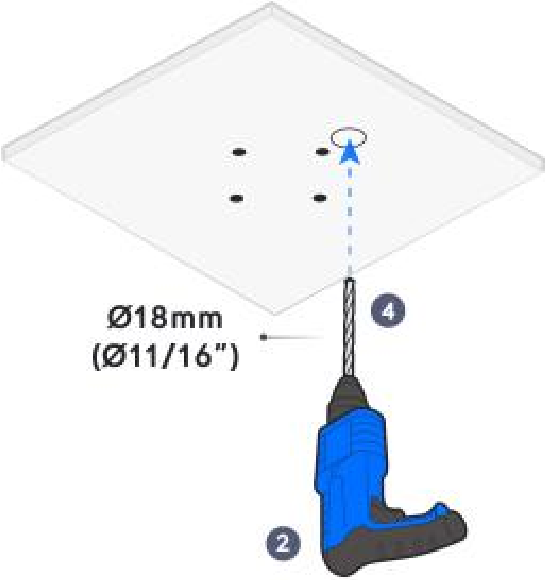
Ø18mm
(Ø11/16")
4
2

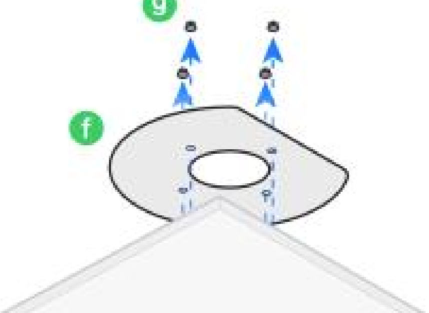

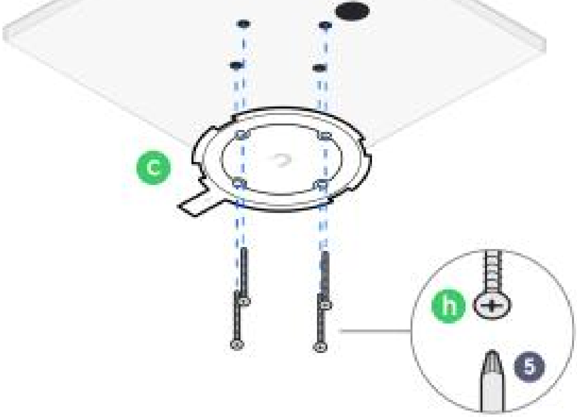

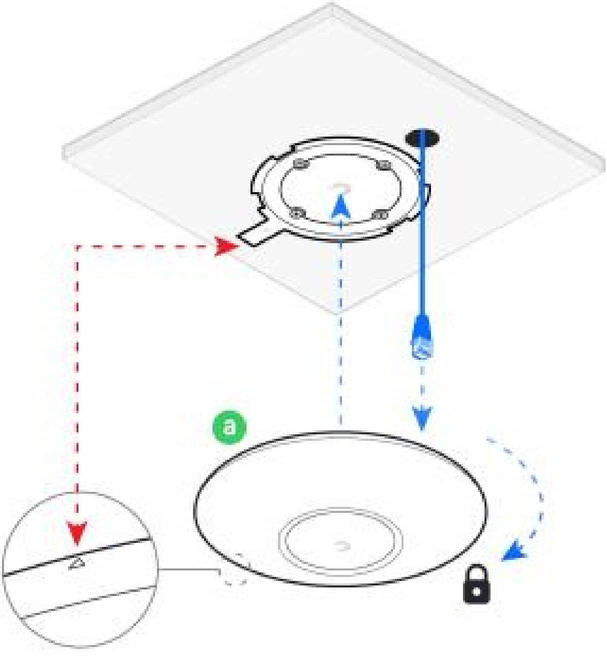

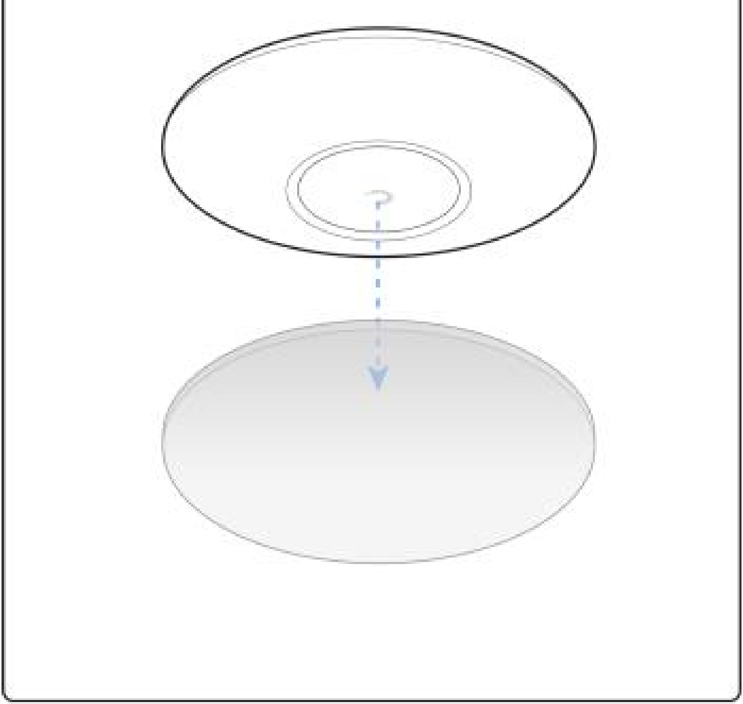

2

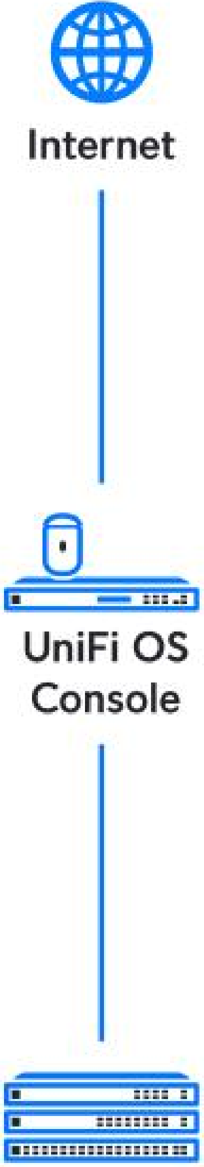
Internet
UniFi OS Console

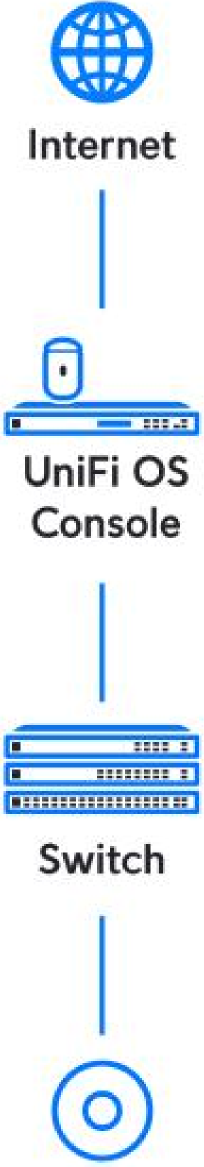
Internet
UniFi OS Console
Switch

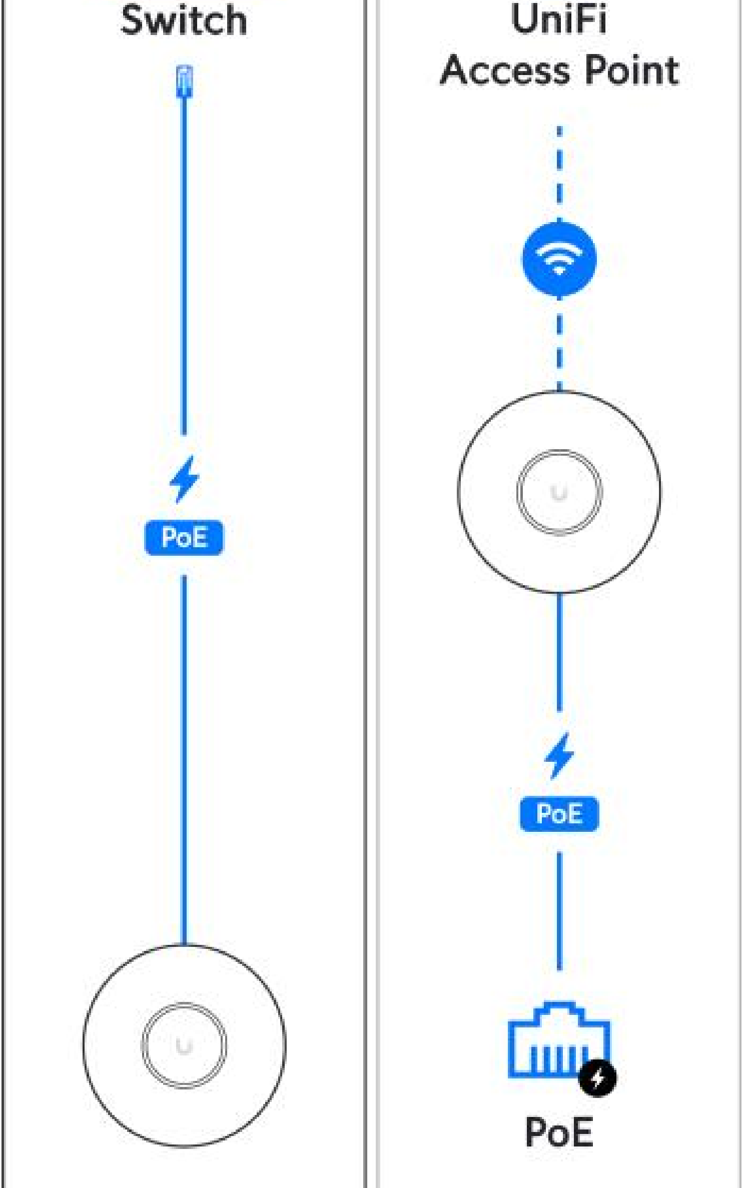
Switch
PoE
UniFi
Access Point
PoE
PoE

3

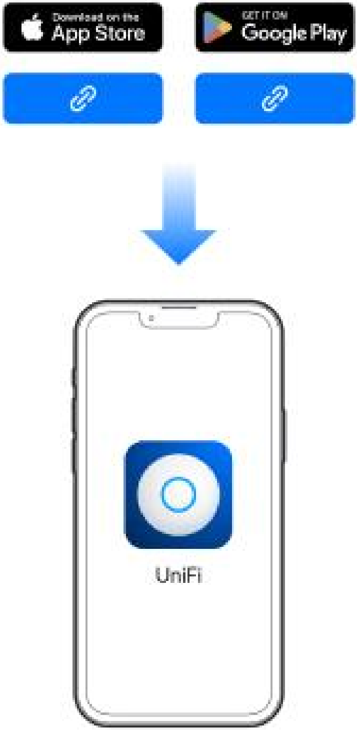
Download on the
App Store
GET IT ON
Google Play
UniFi

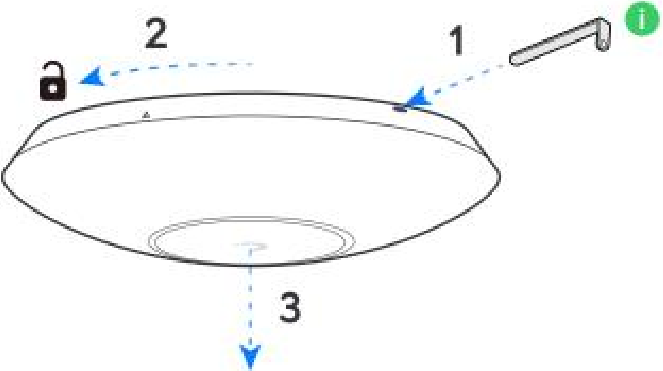

If you need further assistance, visit our Help Center or contact Ubiquiti Support.

[illegible]