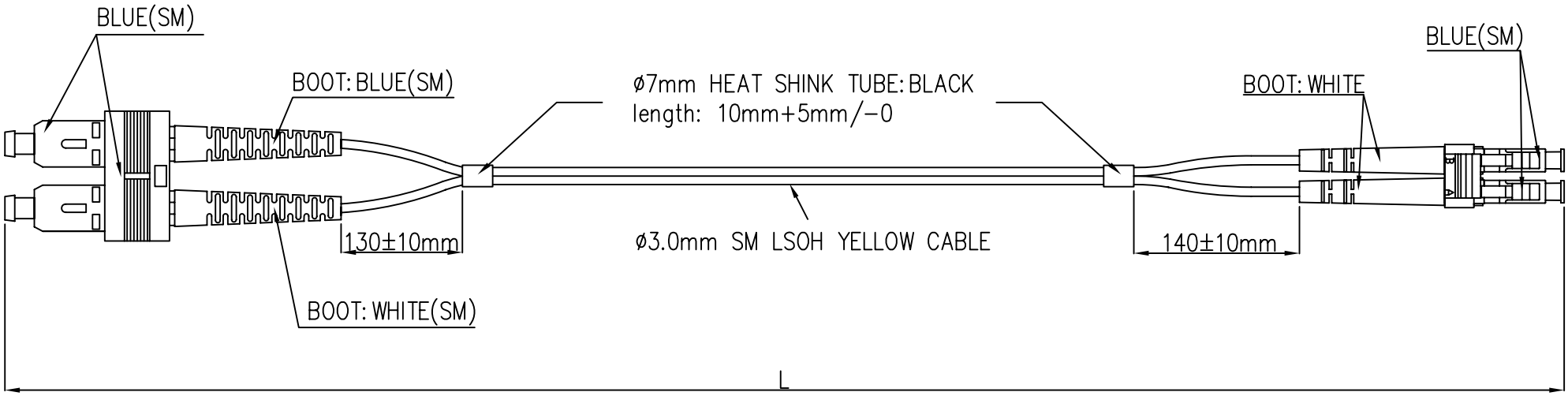

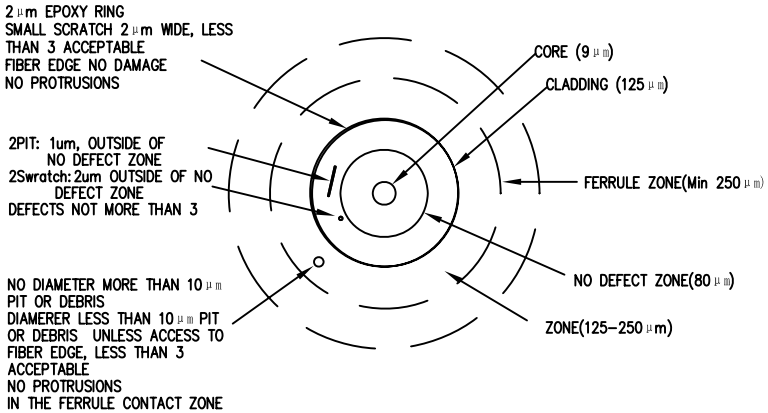

(SM) FIBER END-FACE STANDARD

SPECIFICATIONS:

Type	Single Mode
Insertion Loss	≤0.2dB
Return Loss	≥55dB
Test Wavelength	1310nm

LENGTH TOLERANCE:

LENGTH (L)	TOLERANCE
< 1M	+50mm/-0
≥ 1M < 10M	+100mm/-0
≥10M < 30M	+150mm/-0
≥30M	+1%/-0

Tolerances unless otherwise specified:

Scale

Version 1.0

Designed By	Z.XUN	2013.02.21
Checked By		
Approved By		

sheet 1 of 1

DESC.	DX SC-LC JUMPER
DRG. No.	H01-SCLC-100