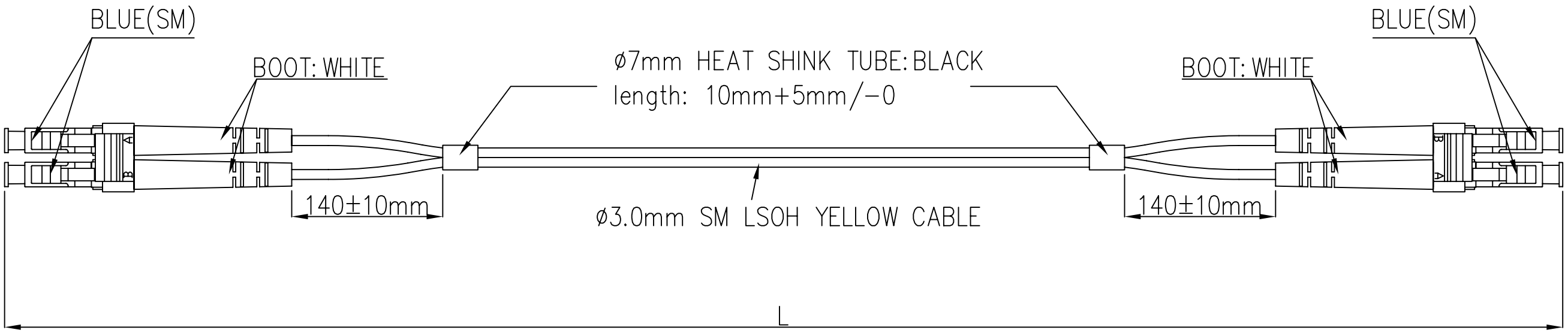

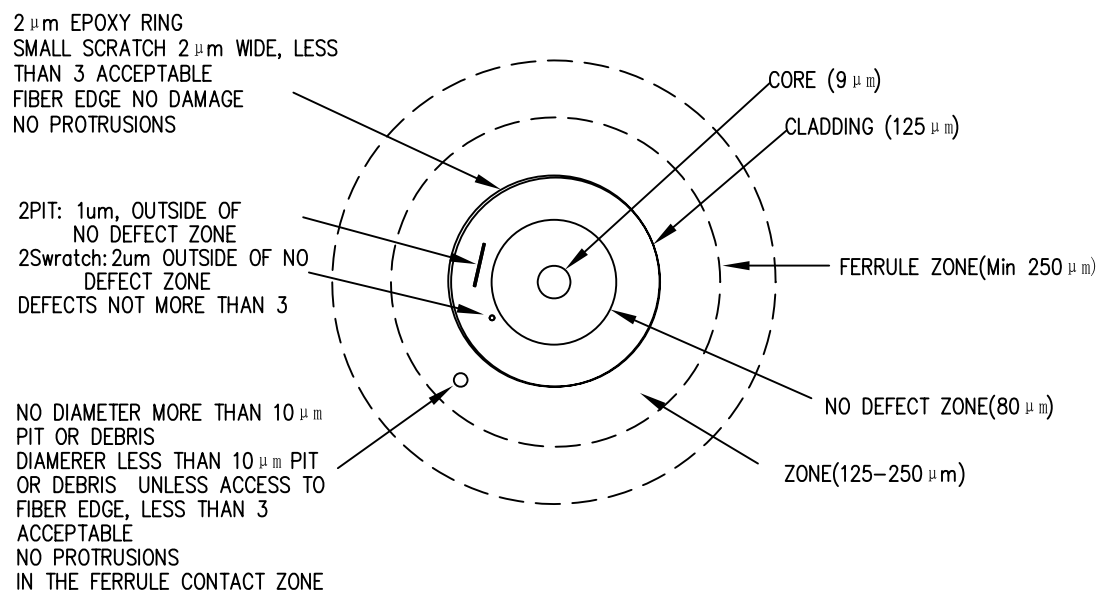

(SM) FIBER END-FACE STANDARD

SPECIFICATIONS:

Type	Single Mode
Insertion Loss	≤0.2dB
Return Loss	≥55dB
Test Wavelength	1310nm

LENGTH TOLERANCE:

LENGTH (L)	TOLERANCE
< 1M	+50mm/-0
≥ 1M <10M	+100mm/-0
≥10M <30M	+150mm/-0
≥30M	+1%/-0

Tolerances unless otherwise specified:	Designed By	Z.XUN	2013.02.21	DESC.	DX LC-LC JUMPER
	Checked By			DRG. No.	H01-LCLC-164
	Approved By				
Scale					
Version	1.0	sheet 1 of 1			