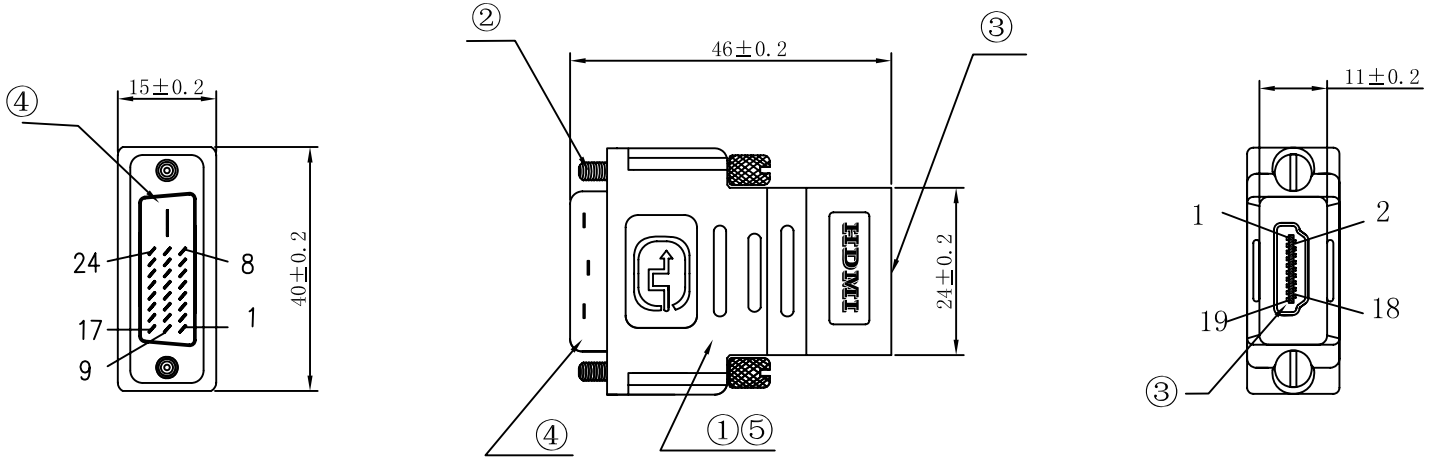

PIN ASSIGNMENT:

DVI24+1 MALE:	1	2	3	6	7	9	10	11	14	15
HDMI19 FEMALE:	3	1	2	15	16	6	4	5	18	17

DVI24+1 MALE:	16	17	18	19	22	23	24	SHELL
HDMI19 FEMALE:	19	9	7	8	11	10	12	SHELL

ROHS Compliant

ELECTRICAL CHARACTER:
a. 100% OPEN & SHORT TESTING;
b. WITHSTANDING VOLTAGE:DC 300V 0.01Sec;
c. INSULATION RESISTANCE:5M Ohm(Min);
d. CONDUCTIVE RESISTANCE:3 Ohm(Max)

NO	Description	Q'TY	Unit
8			
7			
6			
5	Color:black PVC 60P	1	PCS
4	DVI 24+1 MALE (GOLDEN)	1	PCS
3	HDMI 19P FEMALE (GOLDEN)	1	PCS
2	Thumbscrew	2	PCS
1	CABLE:28AWG*18C	1	PCS

TOLERANCE OTHERWISE UNLESS SPECIFIED

UP TO 5	±0.2
ABOVE 5 --30	±0.3
ABOVE 30--50	±0.4
ABOVE 50	±0.5
ANGLE	±3°

ConnectorCo

DRAW:	May Hong	TITLE	HDMI F TO DVI M
CHEDKED:	David Lee	PART NO.	HDMIF-DVIM
APPROVED:	Ausk Chen	DRAW NO.	
DATE	2012-11-9	SCALE	1:1
UNIT	mm		