| RevNo | Revision note | Date | Signature | Checked |
|---|---|---|---|---|
| | | | | |

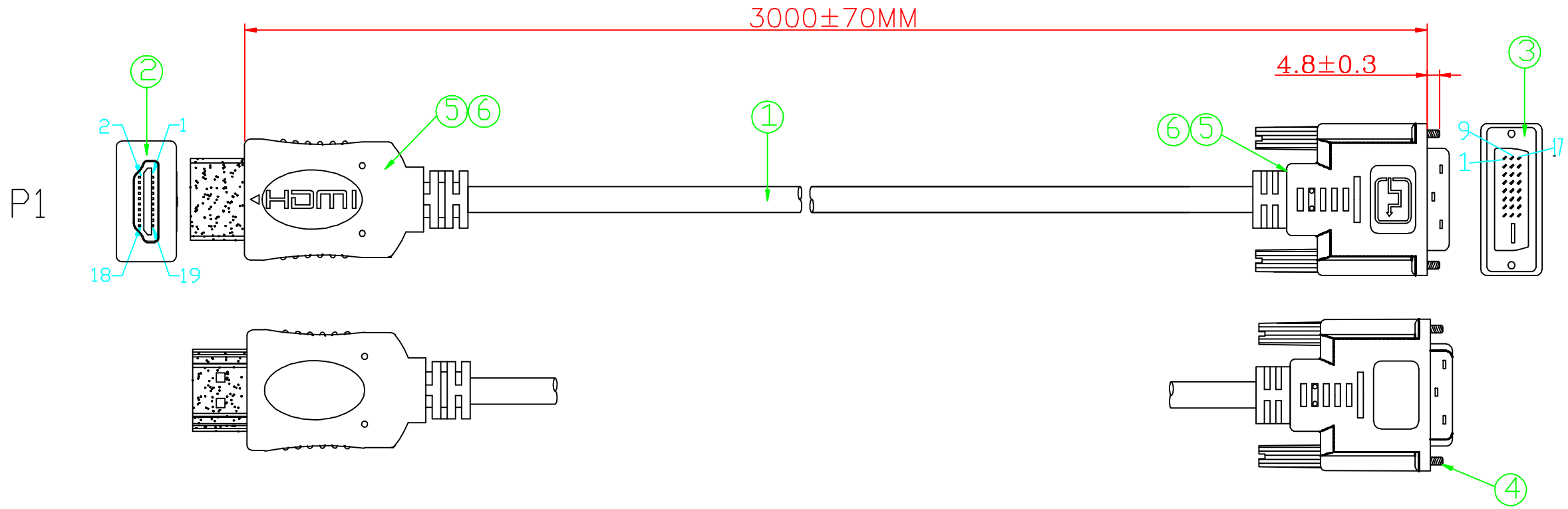


## PIN OUT

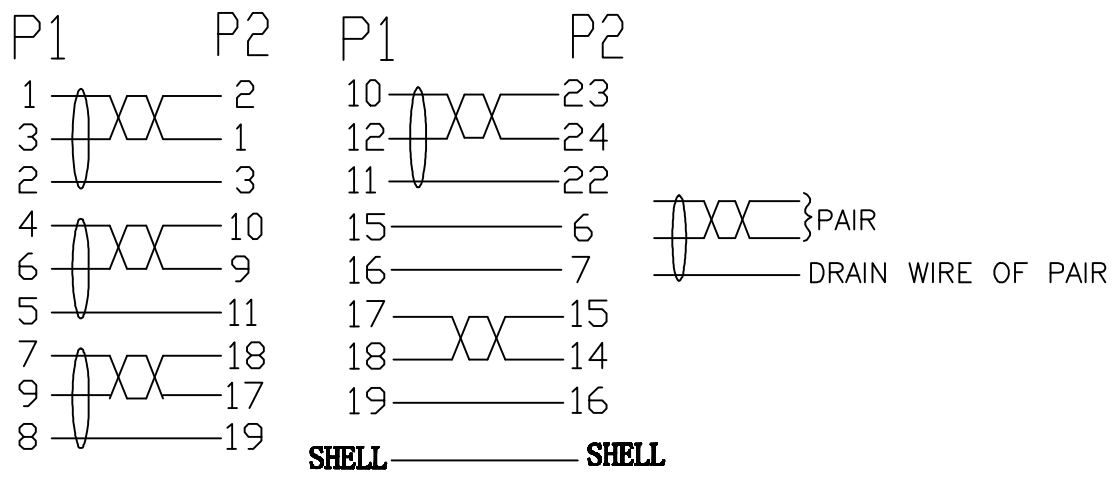


REQUIREMENTS:

1:100% short,open and miss wire test.

2:Insulation resistance:DC300V 10MΩ(Min)
Conduction resistance 5Ω(Max)

| NO. | MATERIAL | DESCRIPTIONG | QTY. | UNIT |
|---|---|---|---|---|
| ⑥ | OUTER MOLDED | BLACK 45P PVC | 0.048 | KG |
| ⑤ | INTER MOLDED | LDPE | 0.021 | KG |
| ④ | SCREW | #4-40UNC 2.3*45.5MM,BLACK PVC | 2 | PCS |
| ③ | CONNECTOR | DVI 24+1/MALE,BLACK INSULATOR,GOLD PLATED SHELL,GOLD PLATED PIN | 1 | PCS |
| ② | CONNECTOR | HDMI A TYPE/MALE,BLACK INSULATOR,GOLD PLATED SHELL,GOLD PLATED PIN | 1 | PCS |
| ① | CABLE | (1P*30#+FME+D+AL+MYLAR)*4C+1P*30#+3C*30#+ADB JACKET: BLACK PVC OD:6.0±0.15MM | 3000 | MM |

| Ltemref | Quantity | Title/Name,designation,material,dimension etc | | Article No./Reference | |
|---|---|---|---|---|---|
| Designed by ACHY | | Checked by HELEN | Approved by - date MARCH 6.2012 | File name L=3M | Date MARCH 6.2012 | Scale FREE |
| ANGLE: | | DVI 24+1/M TO HDMI AM | | | |
| UNIT:MM | | 32 3752 | | Edition 1 | Sheet 1/1 |