P2425/P2425E Outline Dimension
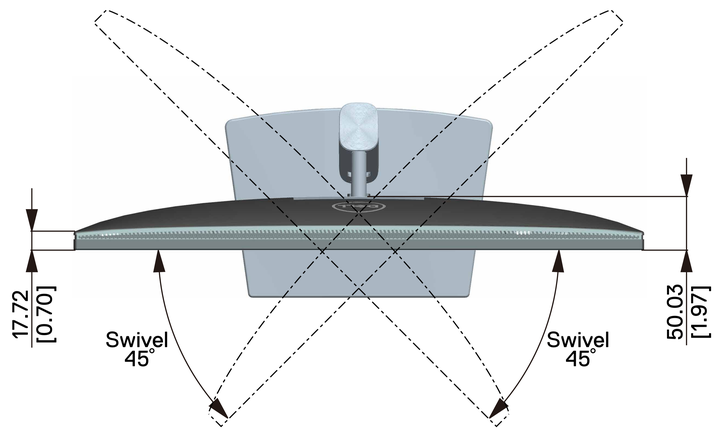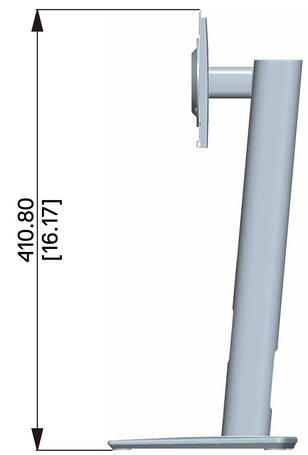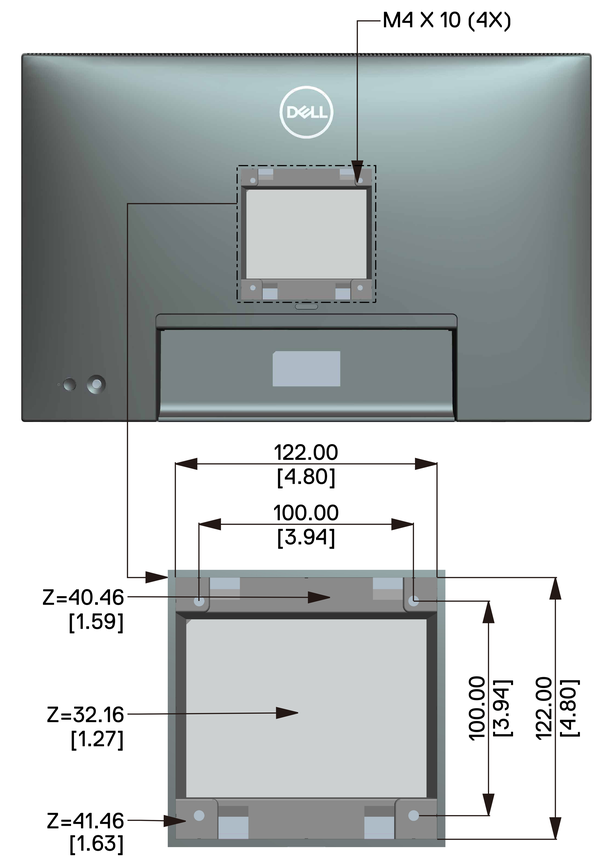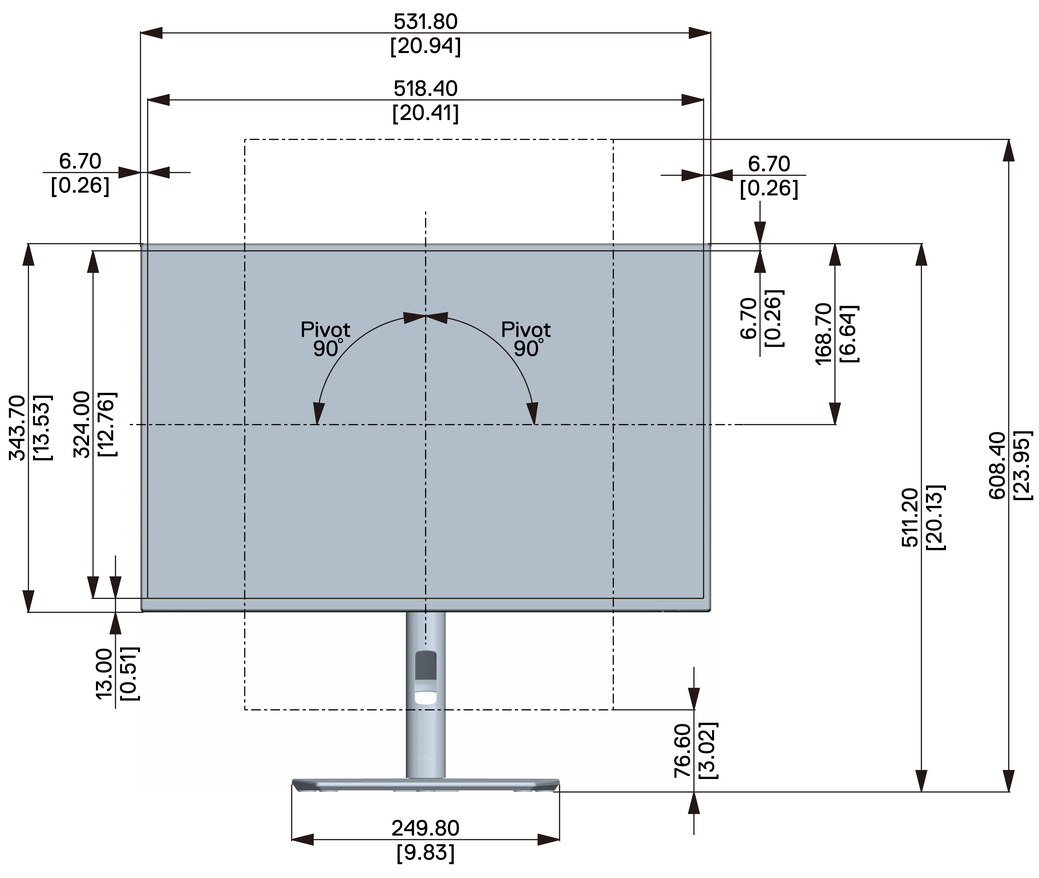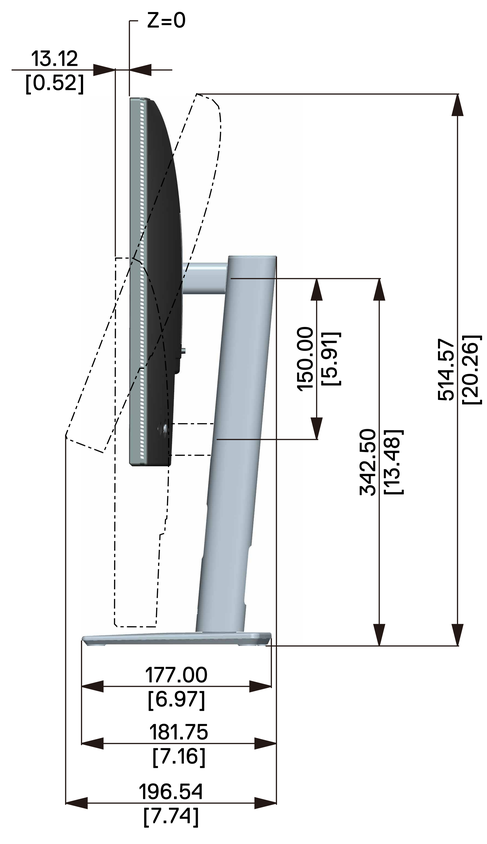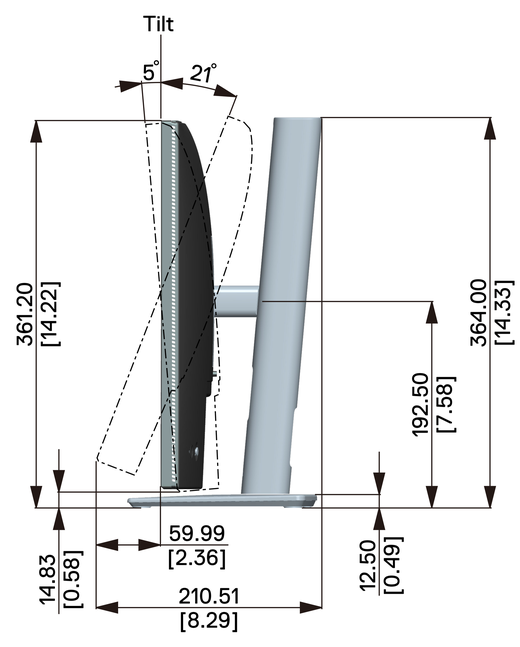
Unit: mm [inch]
Dimension: Nominal
Drawing: Not to scale