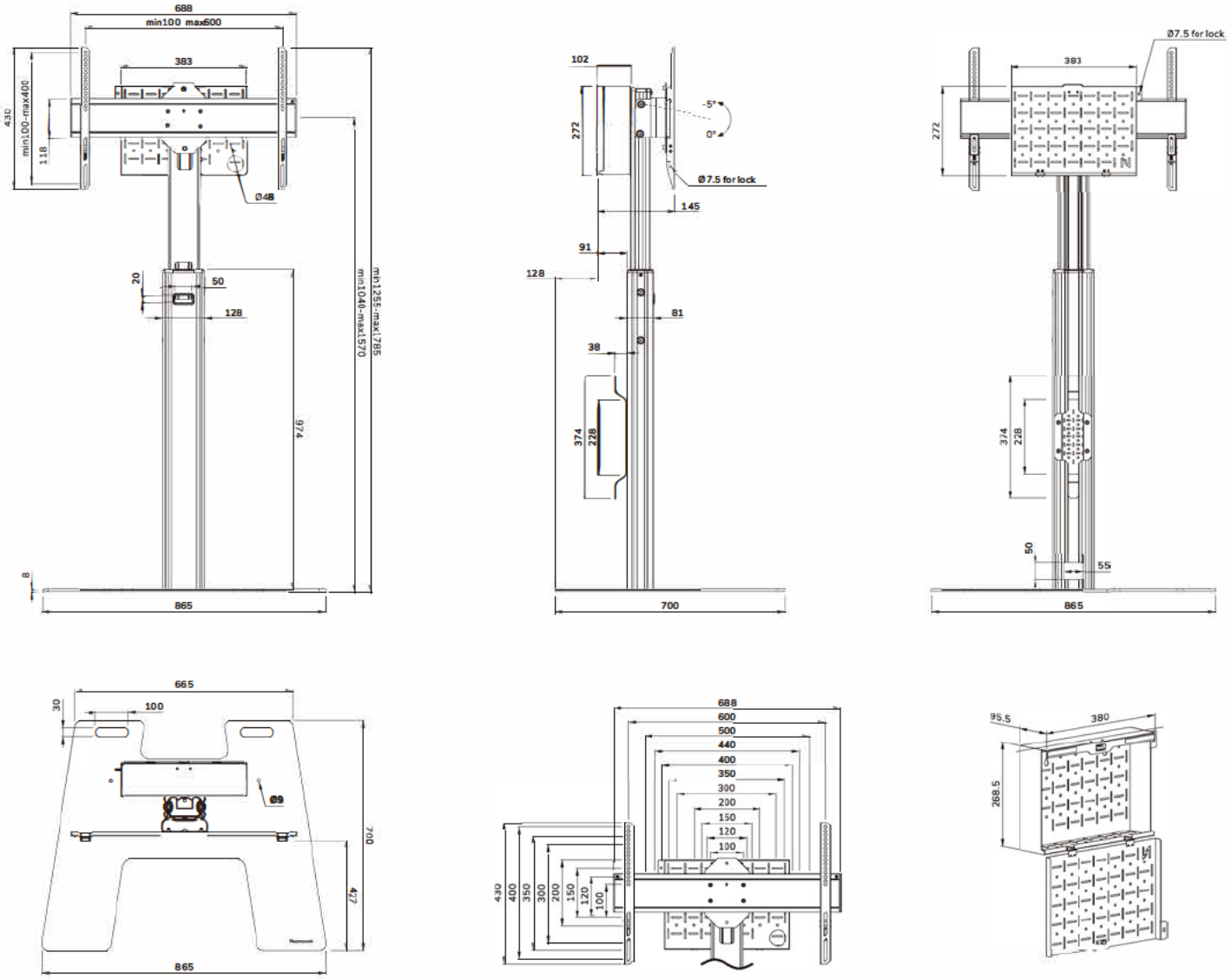




Measuring unit: mm

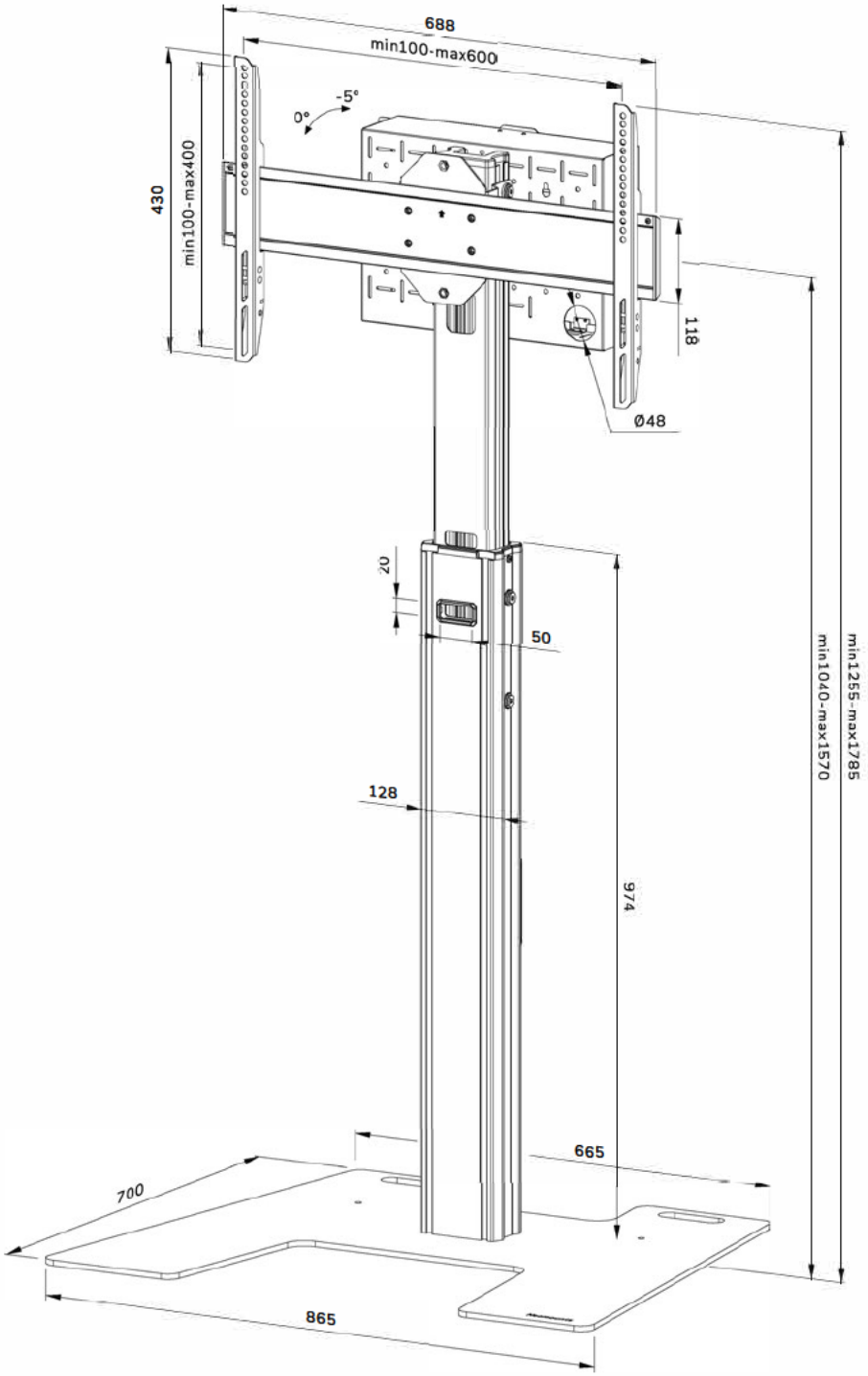
688
min100-max600
-5°
0°
430
min100-max400
118
Ø48
20
50
128
974
665
700
865
min1040-max1570
min1255-max1785